Copyright Information

Copyright © 2024 by SHENZHEN SMARTSAFE TECH CO.,LTD. All rights reserved. No part of this publication may be reproduced, stored in a retrieval system, or transmitted in any form or by any means, electronic, mechanical, photocopying, recording or otherwise, without the prior written permission of SMARTSAFE.

Neither SMARTSAFE nor its affiliates shall be liable to the purchaser of this unit or third parties for damages, losses, costs, or expenses incurred by purchaser or third parties as a result of: Accident, misuse, or abuse of this unit, or unauthorized modifications, repairs, or alterations to this unit, or failure to strictly comply with SMARTSAFE operating and maintenance instructions. SMARTSAFE shall not be liable for any damages or problems arising from the use of any options or any consumable products other than those designated as Original SMARTSAFE Products or SMARTSAFE Approved Products by SMARTSAFE.

All information, specifications and illustrations in this manual are based on the latest information available at the time of printing. SMARTSAFE reserves the right to make changes at any time without prior written or oral notice.

Trademark Information

SmartSafe is a registered trademark of SHENZHEN SMARTSAFE TECH CO.,LTD. in China and other countries. All other SMARTSAFE trademarks, service marks, domain names, logos, and company names referred to in this manual are either trademarks, registered trademarks, service marks, domain names, logos, company names of SMARTSAFE or are otherwise the property of SMARTSAFE or its affiliates. In countries where any of the SMARTSAFE trademarks, service marks, domain names, logos and company names are not registered, SMARTSAFE claims other rights associated with unregistered trademarks, service marks, domain names, logos, and company names. Other products or company names referred to in this manual may be trademarks of their respective owners. You may not use any trademark, service mark, domain name, logo, or company name of SMARTSAFE or any third party without permission from the owner of the applicable trademark, service mark, domain name, logo, or company name. You may contact SMARTSAFE by visiting the website at www.newsmartsafe.com, or writing to SHENZHEN SMARTSAFE TECH CO.,LTD., Building 1, Shanglilang Zhichuangyuan, Nanwan Street, Longgang District, Shenzhen, Guangdong, China, to request written permission to use Materials on this manual for purposes or for all other questions relating to this manual.

Safety Warning

The ADAS PRO+ V2 calibration equipment is suitable for vehicle ADAS system calibration. To avoid causing casualties, property damage, and accidental injury, please read all safety instructions in this section carefully before using the product:

- To avoid improper operation, the operator of the ADAS PRO+ V2 needs to have a background in motor vehicle technology and be familiar with the hazards, risks and working conditions in a repair shop.
- The operator is required to read and understand all the instructions in this manual. In addition, the operator should note the work methods and safety warnings that follows the operating tips.
- In addition, please refer to and follow the regulations of the Trade and Industry Bureau, trade unions, automobile manufacturers and environmental protection regulations, as well as all laws and regulations related to automobile repair shops.

The safety messages herein cover situations SMARTSAFE is aware of SMARTSAFE cannot know, evaluate or advise you as to all of the possible hazards. You must be certain that any conditions or service procedure encountered do not jeopardize your personal safety.

Warning Symbols and Definitions	
	Indicates a serious hazardous situation that, if not avoided or handled incorrectly, could lead to death or severe injury to the user.
	Indicates a potential hazardous situation that, if not avoided or handled incorrectly, could result in minor injury or property damage.
	Indicates the points that the user should observe and don'ts when handling the equipment.

Exhaust gases from the engine contain a variety of toxic compounds (e.g. hydrocarbons, carbon monoxide, nitrogen oxides, etc.), which can be hazardous to human health, cause unresponsiveness, or even result in serious bodily injury or death, and the vehicle under test should be parked in a well-ventilated area during operation.

Please read all safety warnings and operating information carefully. Failure to follow safety warnings and operating information can result in electric shock, fire or serious injury to personnel.

1. Always perform vehicle calibration in a safe environment.
2. Do not connect or disconnect diagnostic equipment while the ignition is switched on or the engine is running.
3. Never operate the diagnostic equipment while driving the vehicle as this may cause a distraction and result in a crash.
4. Before starting the engine, pull the handbrake, especially block the front wheels, and put the gearshift in neutral (manual transmission) or [P] gear (automatic transmission) to avoid starting the engine and causing the vehicle to run out and injure someone.
5. Smoking or the presence of sparks near the battery or engine is prohibited. Do not operate the equipment in an explosive atmosphere.
6. Place a fire extinguisher next to operation place.
7. Wear protective eyewear when inspecting the vehicle.
8. Set the vehicle to stop the vehicle from rolling and moving.
9. Parts such as ignition coil, distributor cap, ignition wiring, and ignition plugs generate dangerous voltages when the engine is running, please take extra care when working around theses parts to prevent electric shock.
10. To avoid damaging the diagnostic equipment or generating erroneous data, make sure:
    - The vehicle battery is fully charged;
    - The connecting parts of the vehicle diagnostic socket are clean and in good condition;
    - The vehicle diagnostic socket is securely and firmly connected to the diagnostic equipment.

Precautions for Operating the ADAS PRO+ V2 Calibration Equipment

To avoid injury to the user or damage to the equipment due to improper operation, please note the following points:

- Be sure to install the equipment according to the method described in the instructions.

- Prevent the ADAS PRO+ V2 from coming into contact with water, high-temperature heat sources, and from being subjected to violent shocks.
- Prevent the ADAS PRO+ V2 from prolonged sunlight.
- Make sure that there are no light reflection points on the calibration target.
- There should be no direct light sources within the camera's field of view, otherwise the camera will reduce the exposure and darken the captured calibration target, which will adversely affect the calibration.
- Properly lay out the light sources to ensure an even distribution of light on the calibration work site.
- Please maintain ADAS PRO+ V2 regularly.

Precautions for Operating the Vehicle

Please read the following information carefully when performing calibration operations:

- Make sure that all wheels of the vehicle are parked on a level ground.
- For automatic transmission vehicles, the gear should be set to P (Park) position
- During the test, make sure that the connection between the diagnostic equipment and the diagnostic socket is good so that the test will not be affected by signal interruption.
- The vehicle system is operating normally and no faults are stored in the fault code memory of the electronic control unit.
- To avoid losing the connector, make sure it is unplugged from the vehicle diagnostic socket after use.
- To avoid losing the connector, unplug it from the vehicle diagnostic socket after use and keep it in a safe place.

Precautions for using the laser equipment

- Store in a dry place.
- Laser beams projected directly into the eyes can cause eye damage.
- Do not look directly at the laser rays.
- Please fix the laser level and do not point the laser beam at people or animals.

- Do not operate the laser level in the vicinity of children. Do not allow children to use the laser instrument.
- Do not observe the laser beam with a magnifying glass or telescope.
- Do not remove or scratch the warning labels on the laser equipment.
- Do not allow the instrument to come close to pacemakers.
- The instrument must be kept away from magnetic data carriers and machines susceptible to magnetic field interference.
- Do not operate the instrument in explosive environments such as those with flammable liquids, gases or dust.
- Do not use strong detergents or chemicals to clean the instrument. The instrument can be cleaned with water or water with a small amount of soap.
- Please prevent the instrument from falling.
- Remove the battery when the instrument is not used for a long time.
- When installing the laser meter, make sure it is securely mounted.

The laser identification goggles should not be used as protective eyewear. Wearing laser identification goggles may help you recognize lasers, but they do not protect you from laser radiation.

Catalog

1. Product Introduction 1
1.1 About ADAS 1
1.2 About ADAS PRO+ V2 1
1.3 Packing List 1
2. Learn about the ADAS PRO+ V2 Calibration Equipment 2
2.1 Base Assembly 4
2.2 Column Assembly 5
2.3 Crossbeam Assembly 6
2.4 Tablet Stand 7
2.5 Wheel Clamp Assembly 8
2.6 Mid-mounted Laser (LAC09-02) 11
2.7 Distance Measuring Panel (LAC09-01) 11
3. First Time Use 12
3.1 Installation of ADAS Calibration Equipment 12
3.2 Activate Software ADAS Calibration Function 20
4. Starting to Use ADAS Calibration Equipment 23
4.1 Prerequisites for Using the ADAS Calibration Equipment 23
4.2 Calibrating the Camera 27
4.3 Calibrate Radar Sensor 33
5. Maintenance and Care 41
6. Appendix: Calibration Target 42
6.1 Front Camera Calibration Target 42
6.2 Radar Target (Optional) 48
6.3 Rear View & Omnidirectional Target (Optional) 49

1. Product Introduction

1.1 About ADAS

ADAS, fully named the "Advanced Driver Assistance System". It's operation principle is to utilize vehicle cameras, radars and other sensors to constantly perceive the surrounding environment during automobile operation. It collects data, identifies, detects, and tracks both static and dynamic objects. Combining this with navigation map data, the system performs computational analysis to allow drivers to preemptively perceive potential hazards. This effectively enhances the comfort and safety of automobile driving.

The cameras and other sensors used in the Advanced Driver Assistance System must be precisely calibrated and adjusted. Incorrect calibration can cause the system to output incorrect results or even fail completely, leading to serious accidents and even death.

1.2 About ADAS PRO+ V2

SmartSafe ADAS PRO+ V2 calibration equipment is a comprehensive and flexible calibration equipment that allows you to effectively and accurately calibrate the vehicle camera, radar, and other sensors used in all types of driver assistance systems, such as the front-facing camera for the Lane Departure Warning (LDW) system, and a radar sensor for the Adaptive Cruise Control (ACC) system (optional, for details please refer to Section 6.2 on radar targets), etc.

When using the ADAS PRO+ V2 calibration equipment to perform vehicle calibration, it is necessary to use it together with ADAS-compatible diagnostic equipment authorized or approved by SmartSafe (purchased separately). The calibration of the ADAS system requires adjusting the relative position between the ADAS PRO+ V2 calibration equipment and the vehicle to be calibrated, while together with the calibration software on the diagnostic equipment.

1.3 Packing List

For product configuration details, please consult your local dealer or check the packing list that comes with the product.

When unloading, please note: heavy equipment may fall and cause personal injury, please unload the equipment with the help of others or use appropriate auxiliary tools as needed.

2. Learn about the ADAS PRO+ V2 Calibration Equipment

The ADAS PRO+ V2 calibration equipment mainly consists of the following components:

(*This picture is not a physical picture of the product and is for explanation purposes only. Due to the continuous improvement of the product, it will be updated from time to time, please refer to the actual product).

- **Front**

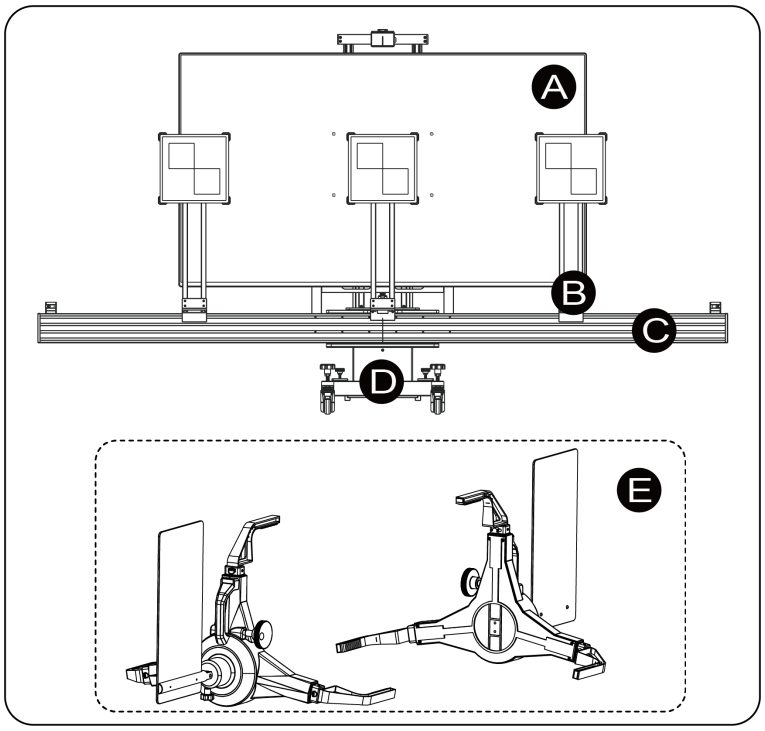

No.	Specific Description
A	**Display** Used to display the front camera calibration target.
B	**Physical target stand (optional)** For mounting the physical target (optional), the physical target and the electronic target play a complementary role.
C	**Crossbeam assembly** It is mounted on the column for placing the target stand, center distance meter and ACC radar target (optional).

D	**Base assembly** It is used for fixing the column, balancing the crossbeam and target holder mounted on the column, and supporting front and rear fine adjustment. There are 4 wheels on the base assembly, which is convenient for users to move the equipment.
E	**Wheel clamp assembly** Mounted on the rear wheels of the vehicle, it is used to adjust the parallelism of the calibration equipment with the vehicle by using the left and right distance meters on the crossbeam (for the location of the distance meters, please refer to the crossbeam assembly diagram in 2.3).

- **Back**

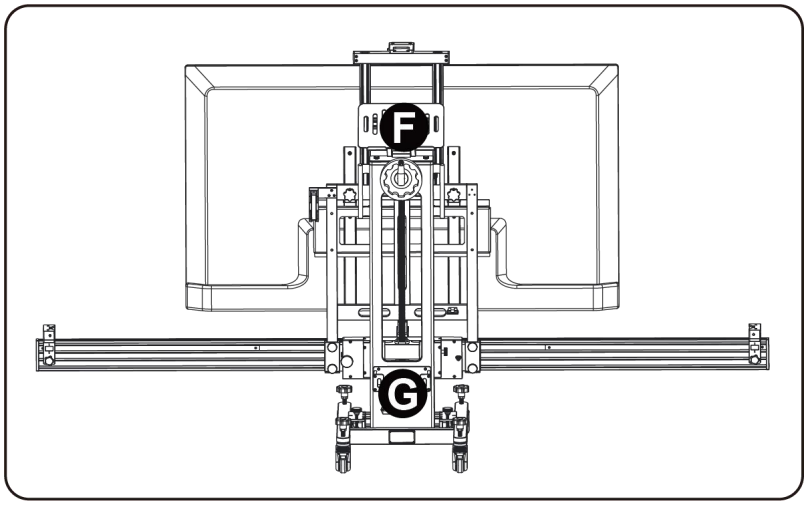

No.	Specific Description
F	**Tablet stand** For holding diagnostic equipment.
G	**Column assembly** Fixed in the middle of the base, it is used to fix the crossbeam and the target stand and to enable equipment height adjustment (supports manual and electric adjustment).

2.1 Base Assembly

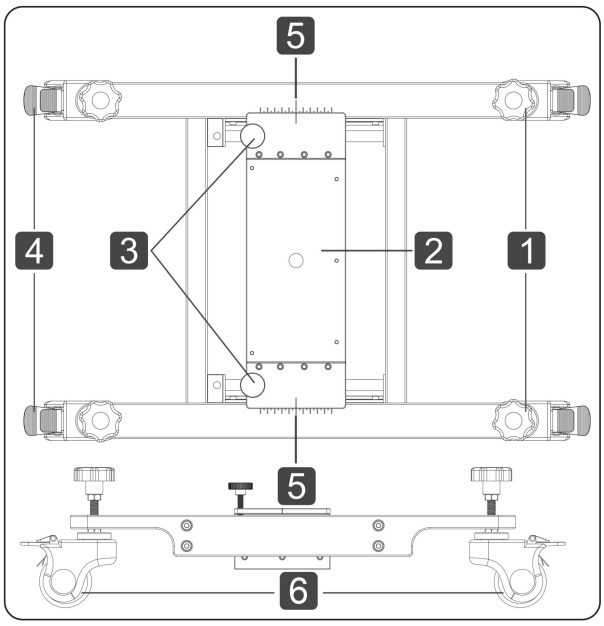

No.	Specific Description
1	**Adjustment knob** For adjusting the level of the equipment.
2	**Column connection plate** Used for mounting fixed columns, can be fine-tuned back and forth.
3	**Forward and backward fine adjustment locking knob** After unlocking the knob, the position can be finely adjusted forwards and backwards.
4	**Brake** Push it down to lock the universal wheel and fix the position of the equipment.
5	**Centering scale line** Used to indicate whether the equipment is centered front to back.
6	**Universal wheel** For moving the calibration equipment.

2.2 Column Assembly

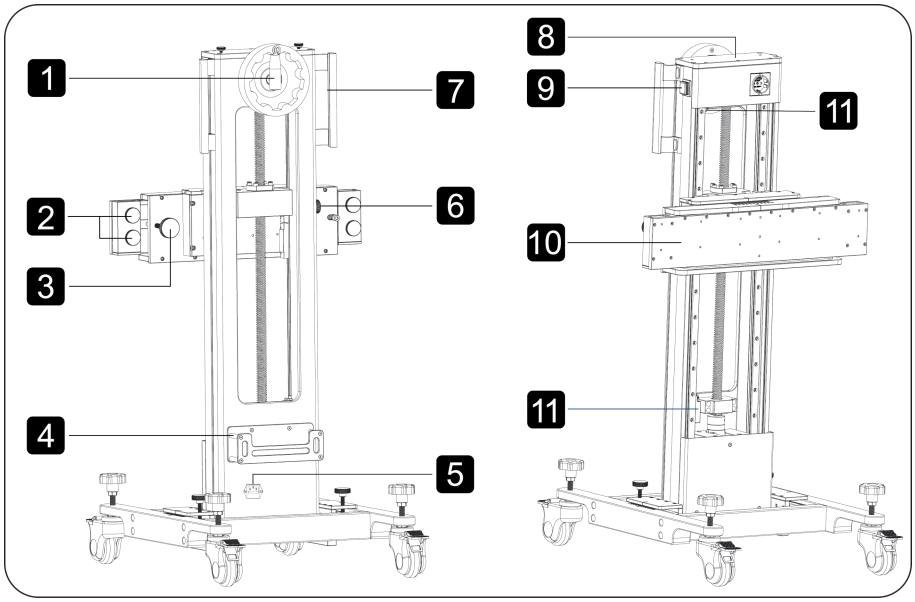

No.	Specific Description	No.	Specific Description
1	**Handwheel** For manually raising and lowering the height of the equipment.	7	**Handle** For easy movement of the equipment.
2	**Fixing knob** For fixing the target holder.	8	**Column top cover** For fixing the tablet stand.
3	**Angle fine adjustment knob** For adjusting the equipment parallel to the vehicle.	9	**Lift Switch** Used to electrically control the lift and lower of the equipment and contains three gears: lift, stop and lower.
4	**Hanger** For holding a mobile power supply or power adapter.	10	**Crossbeam fixing plate** For connecting and fixing the crossbeam.
5	**Power outlet** Used to connect the power supply to power the equipment.	11	**Limit switch** Used to stop lifting when the equipment is electrically lifted to the highest/lowest position. After the limit switch is triggered, no further manual lifting/lowering operation should be enforced to avoid damage to the limit switch and the equipment.
6	**Left and right fine adjustment knobs** Used to adjust the alignment of the equipment with the vehicle.		

2.3 Crossbeam Assembly

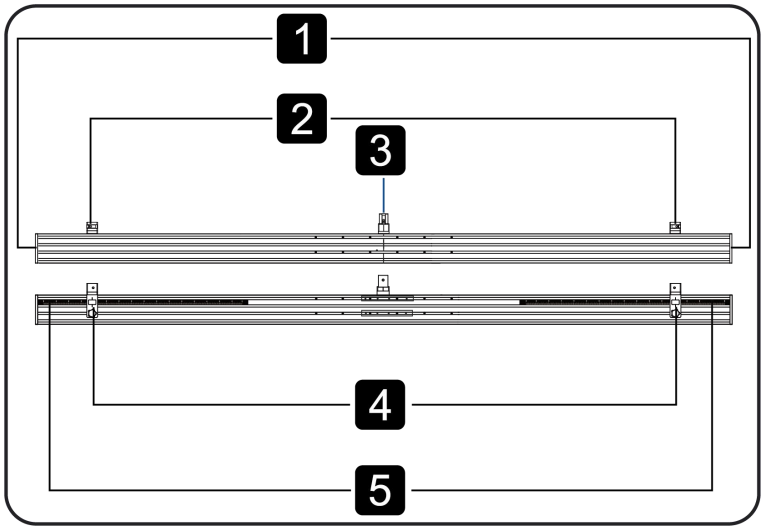

No.	Specific Description
1	**End cap**
2	**Positioning distance meter** For measuring the distance from the equipment to the wheel clamp.
3	**Center distance meter assembly** For measuring the distance from the equipment to the vehicle, to be used with the distance measuring panel.
4	**Positioning distance meter fixing knob** For fixing the distance meter.
5	**Scale** For positioning the physical target (optional) and the distance meter.

2.4 Tablet Stand

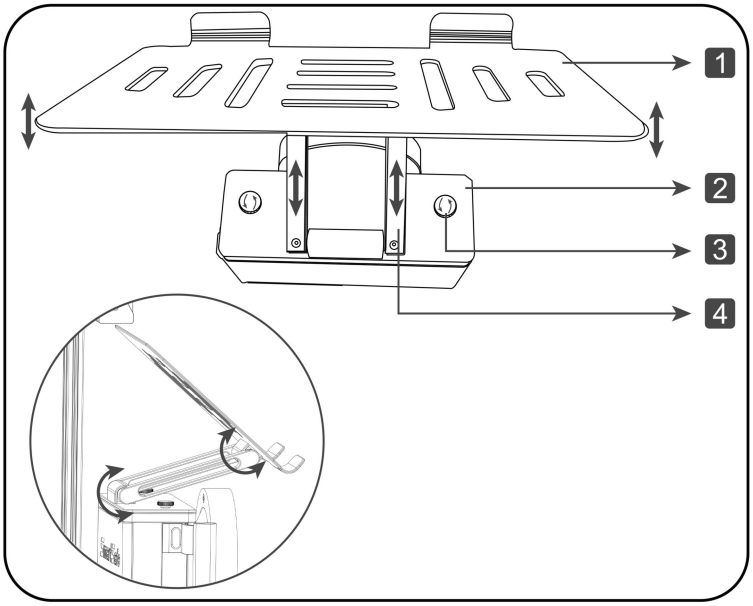

No.	Specific Description
1	**Tray** For holding diagnostic equipment.
2	**Tablet stand base** Used to secure the tablet stand to the column.
3	**Fixing knob** For locking the tablet stand.
4	**Connecting rod** Used to adjust the height and angle of the tablet stand.

*WARNING: Please adjust the position of the tablet stand before raising or lowering the target stand to avoid obstruction of the large screen which may cause damage to the equipment or dropping of items on the tablet stand.

2.5 Wheel Clamp Assembly

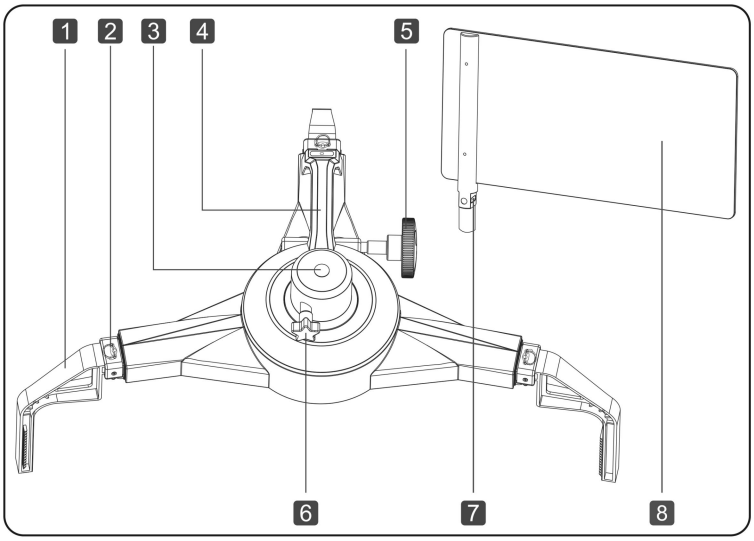

No.	Specific Description
1	**Suspension mount** For attaching wheel clamps to vehicle tires.
2	**Cable switch** Used to adjust the suspension mount mounting slot or to remove the suspension mount from the wheel clamp.
3	**Mounting holes** For mounting the wheel clamp panel.
4	**Handle** For lifting the wheel clamp.
5	**Adjustment knob** Used to adjust the extension of the wheel clamp suspension mount for different size tires.
6	**Fixing knob** For locking the wheel clamp panel in the mounting holes (3).

7	**Wheel clamp panel level bubble** Used to determine if the wheel clamp panel is perpendicular to the vehicle tires.
8	**Wheel clamp panel** Used in conjunction with the positioning distance meter on the crossbeam to measure the distance from the equipment to the wheel clamp.

Note: The wheel clamp provides two types of suspension mount (long and short), users can determine which to choose according to the actual vehicle conditions. Long and short one have the same installation and adjustment method.

2.5.1 Installation of the Suspension Mount

1. Pull up the pull cord switch (2) and insert each of the 3 suspension mounts (1) into the wheel clamps, making sure that each suspension mount is installed at the same depth.
2. The two holes in the suspension mounts are used to lock the suspension mounts at the maximum and minimum distance applicable. After the suspension mount is locked, the pull cord switch needs to be activated to re-pull out/insert the suspension mount.

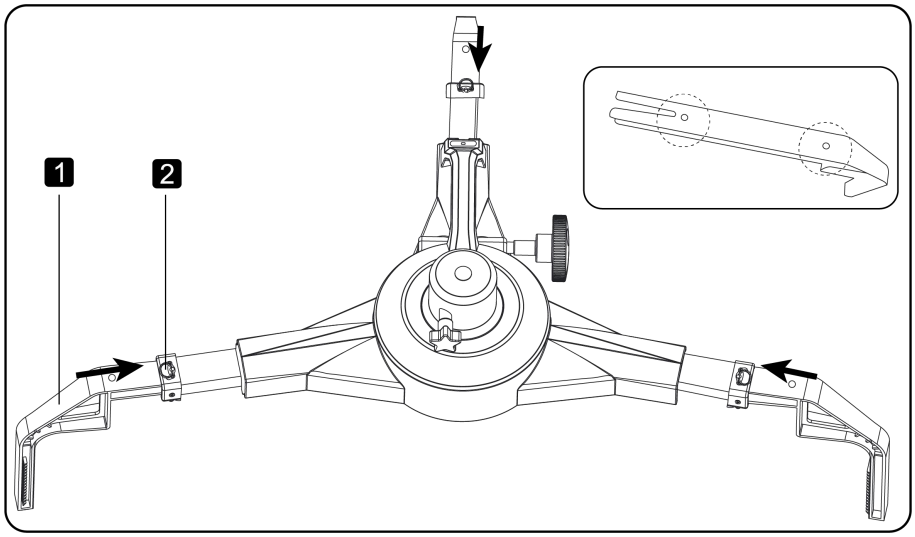

2.5.2 Installation of the Wheel Clamp Panel

The steps for installing the wheel clamp panel are as follows (for assembly introductions, please refer to the diagrams in Section 2.5 on wheel clamp assembly).

1. Loosen the fixing knob (6).
2. Insert the wheel clamp panel into the mounting holes (3), making sure the wheel clamp panel level bubble (7) is facing up, and tighten the fixing knob (6).
3. Once installation is complete, hold the handle (4) and lay the wheel clamp assembly flat on the ground as the diagram①shown below. When using the short suspension mount, the wheel clamp can be hung on the crossbeam of the calibration equipment as the diagram ② shown below. Please do not position the wheel clamp as the diagram ③ shown below to avoid damaging the components.

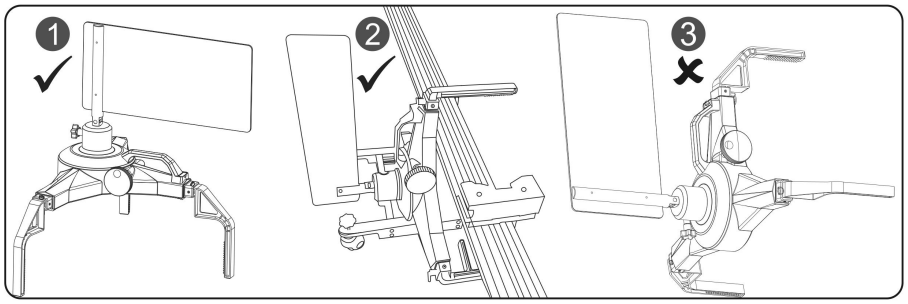

2.6 Mid-mounted Laser (LAC09-02)

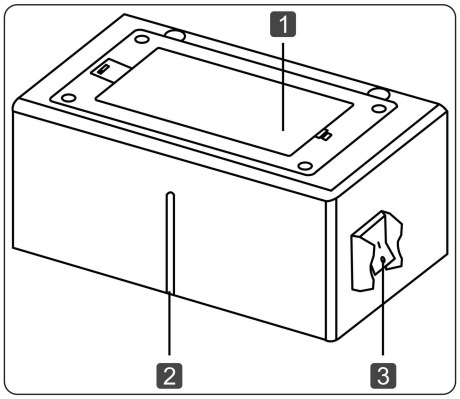

No.	Specific Description
1	**Battery Pack** Used to power the laser. 2 AA (size 5) batteries are required.
2	**Laser line output port**
3	**Switch** It is used to activate or deactivate the laser line of the mid-mounted laser .

2.7 Distance Measuring Panel (LAC09-01)

Used with the mid-mounted distance meter assembly to measure the distance between the equipment and the vehicle.

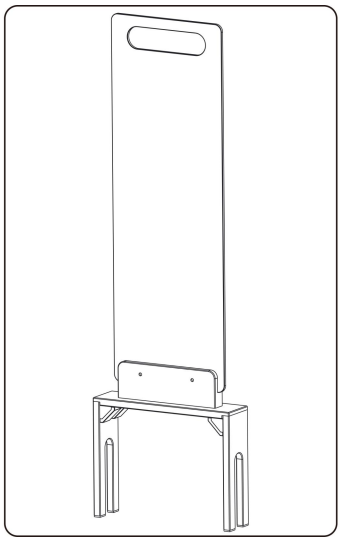

3. First Time Use

3.1 Installation of ADAS Calibration Equipment

3.1.1 Installation of Crossbeams

1. Move the distance meters on the left and right crossbeams to each end. Place the segmented crossbeam on the workbench, allowing its left and right ends equipped with the distance meter assembly to hang over both sides of the workbench.

   Notes:

   a. Ensure that at least two-thirds of the segmented crossbeam is placed at the workbench to avoid tipping.

   b. If installing on the floor, it is recommended that protective mats be laid to avoid scratching the crossbeams. The distance meter assembly on both sides of the crossbeam can be removed as needed to allow the segmented crossbeam to sit flat on the floor for complete installation.

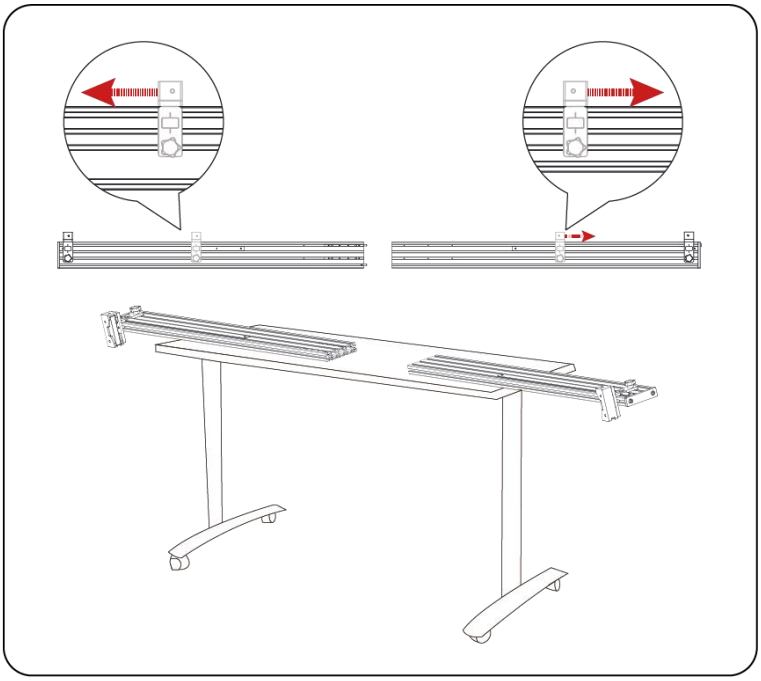

2. Ensure that the crossbeam locating pins are aligned with the corresponding holes and connect the segmented crossbeams in the direction of the arrows shown in the diagram.

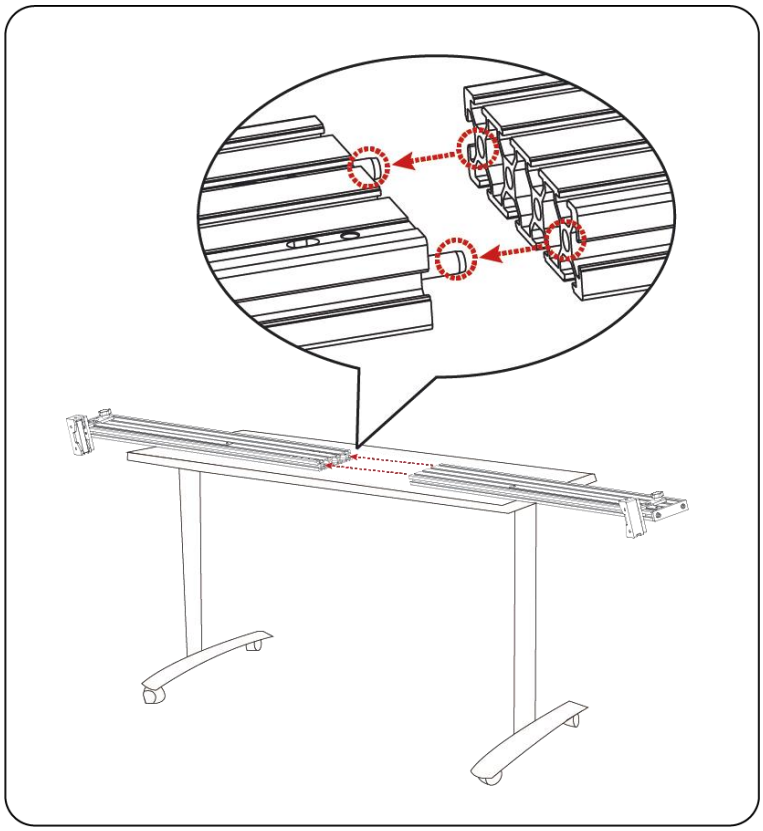

3. Use Allen wrench to loosen 8 fixing screws (refer to position S1~S8 in the diagram) and move the one-piece splicing bar to the middle position of the crossbeam, make sure that the through-holes on the one-piece splicing bar and the through-holes on the crossbeam are aligned (refer to position P1~P4 in the diagram), and then tighten the 8 fixing screws to fix the one-piece splicing piece.

Note: Before fixing the splices, make sure that the left and right crossbeam connection ports fit perfectly without any obvious gaps, and that the crossbeams on both sides are flush.

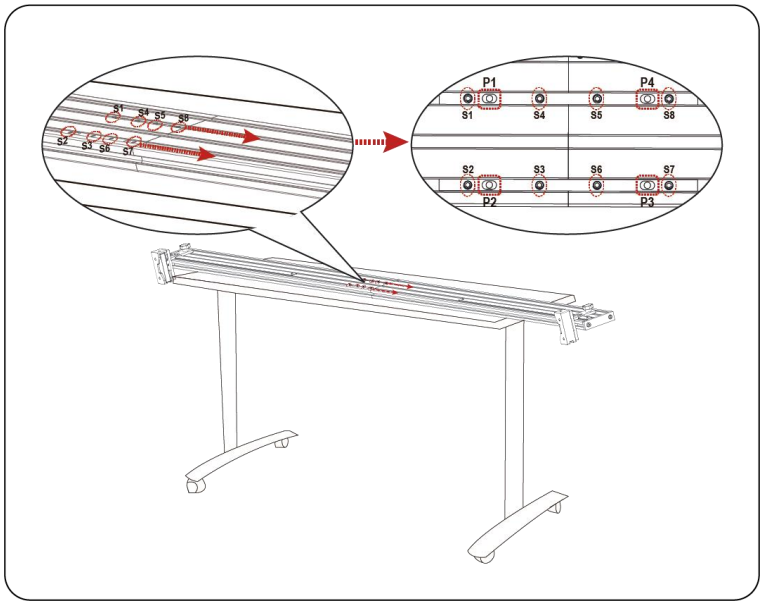

4. Place the connected crossbeam onto the crossbeam fixing plate, align the mounting holes on both the crossbeam and the fixing plate, and then tighten twelve fixing screws to securely fasten the crossbeam in place.

Notes:

1) The scale on the side of the crossbeam should face the back of the calibration tool and the front of the laser distance meter should point in the opposite direction of the scale.

2) Due to the heavy weight of the crossbeam, it is recommended that two people work together to install it, so as to avoid any personal injury that may be caused by dropping it during assembly.

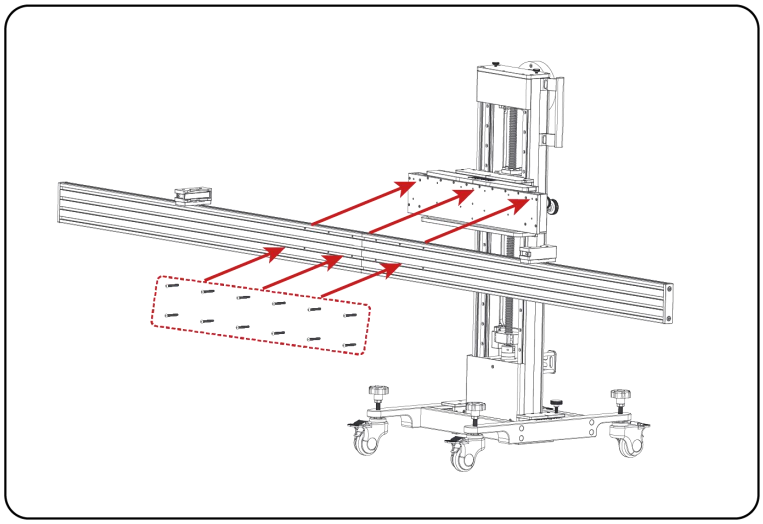

3.1.2 Installation of the Large Screen

The steps for installing the large screen are as follows:

1. Install the large screen stand

   Insert the large screen stand into the fixing slot on the column and make sure that the large screen stand is inserted into the bottom of the fixing slot.

   Tighten the fixing knob on both sides to secure the large screen stand.

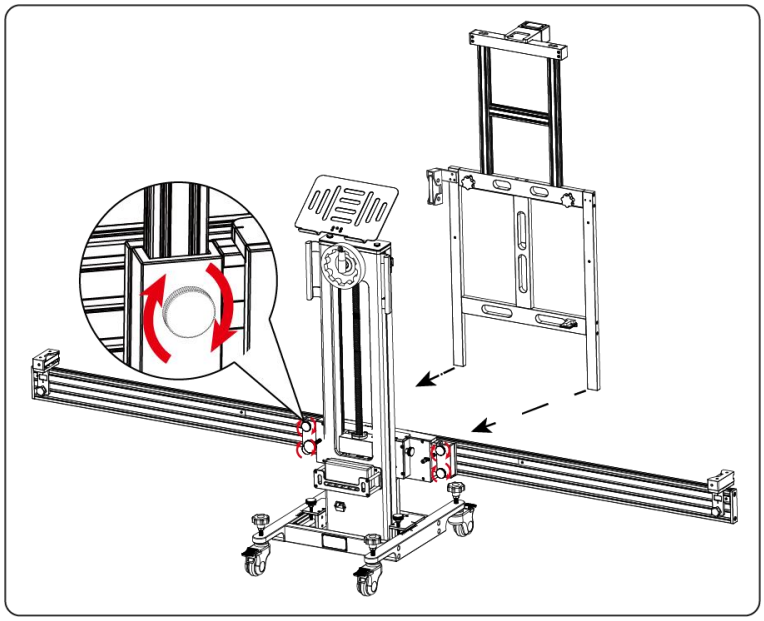

2. Secure the mounting plate to the stand with the screws.

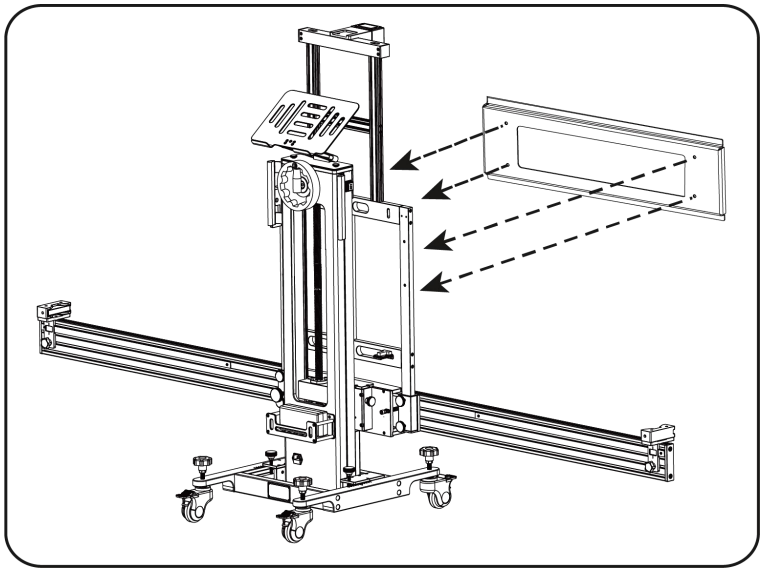

3. Install the large screen bracket and secure the large screen to the bracket with screws.

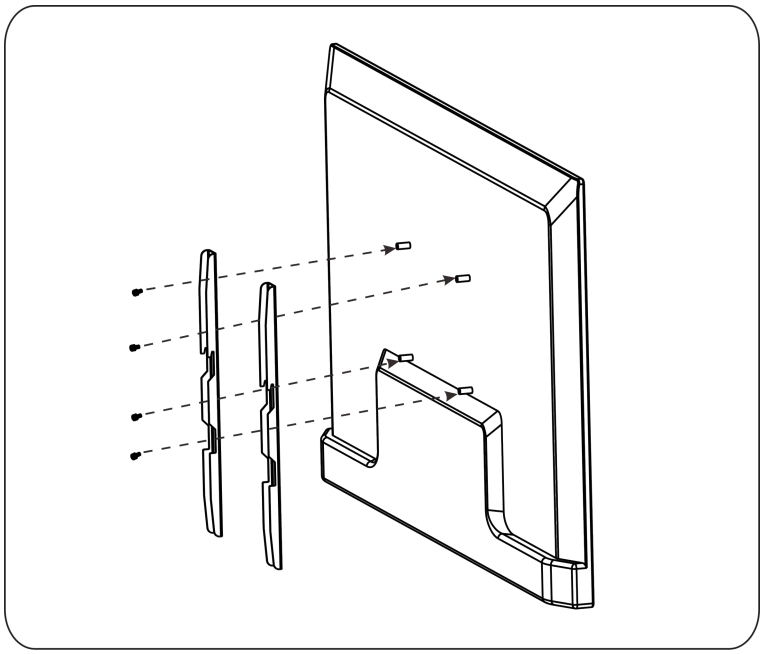

4. Attach the bracket on the back of the large screen to the mounting plate, and ensure that the holes on the bracket overlap with the holes on the stand .

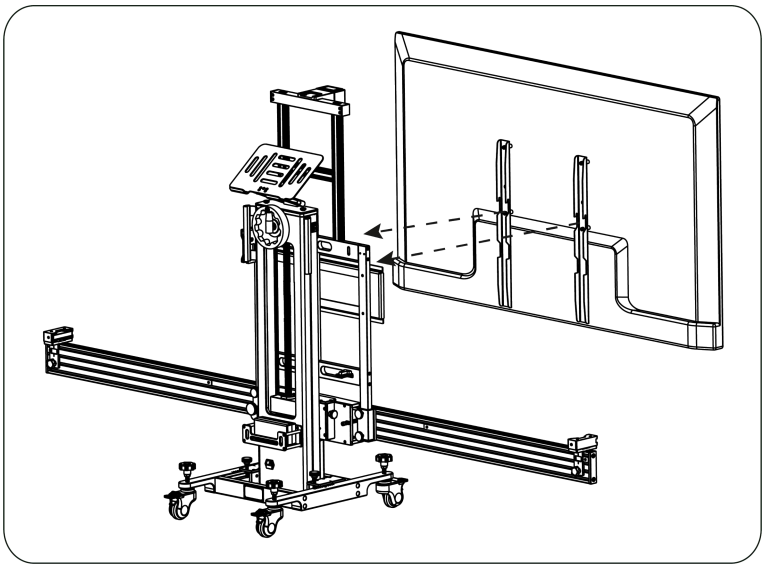

5. Secure the stand and bracket with screws.

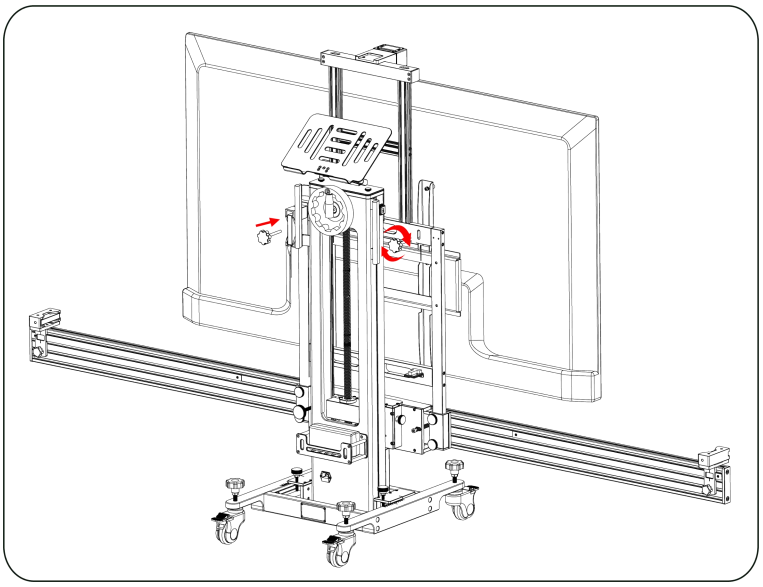

3.1.3 Installation of the Mid-mounted Laser

Attach the mid-mounted laser to the large screen stand.

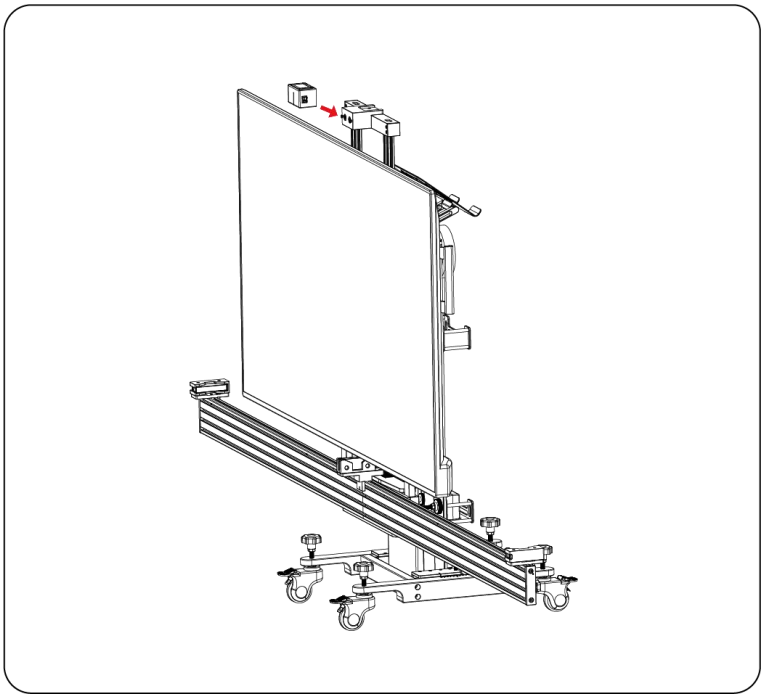

3.1.4 Installation of the Tablet Stand

Keep the tray of the tablet stand facing towards the rear of the equipment, aligning the mounting holes on the base of the tablet stand with those on the top of the upright column. Insert the fixing knob into the mounting holes and rotate the fixing knob to secure the tablet stand.

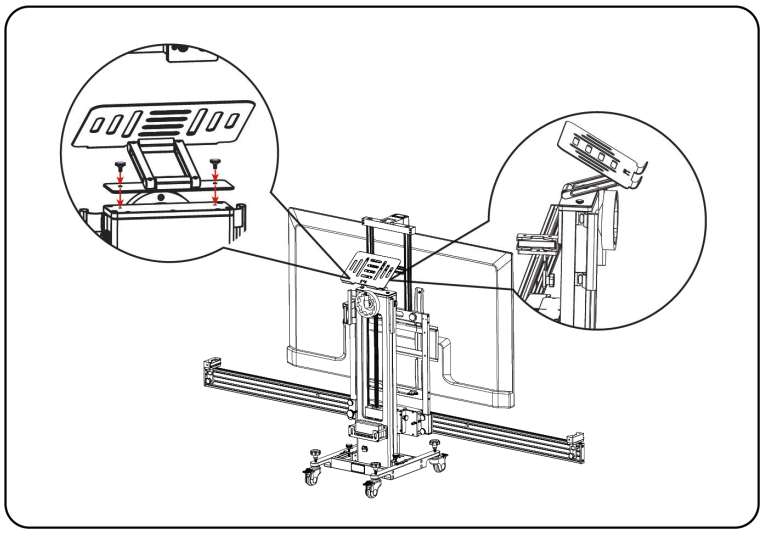

3.1.5 Installation of Wheel Clamp Assembly

Follow the steps below to install the wheel clamp assembly on the vehicle tire.

1. Align the wheel clamp panel vertically with the calibration equipment, then hold the handle to suspend the wheel clamp on the tire.

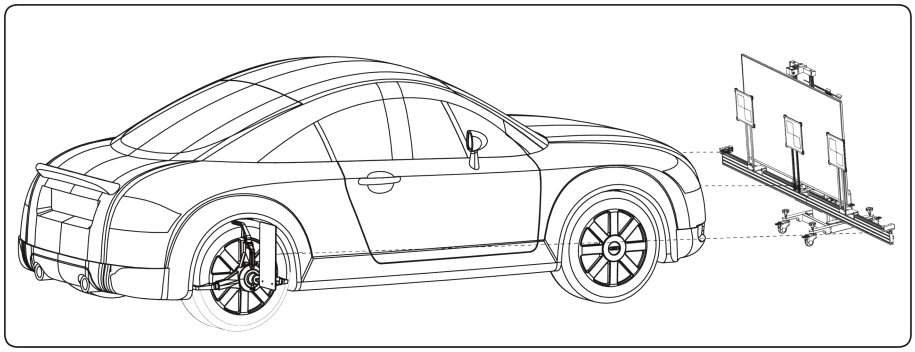

2. Make sure the level bubble (7) of the wheel clamp panel is centered, then turn the adjustment knob (5) to tighten the wheel clamp on the tire.

NOTE: See 2.5 wheel clamp assembly diagram for a description of the wheel clamp assembly.

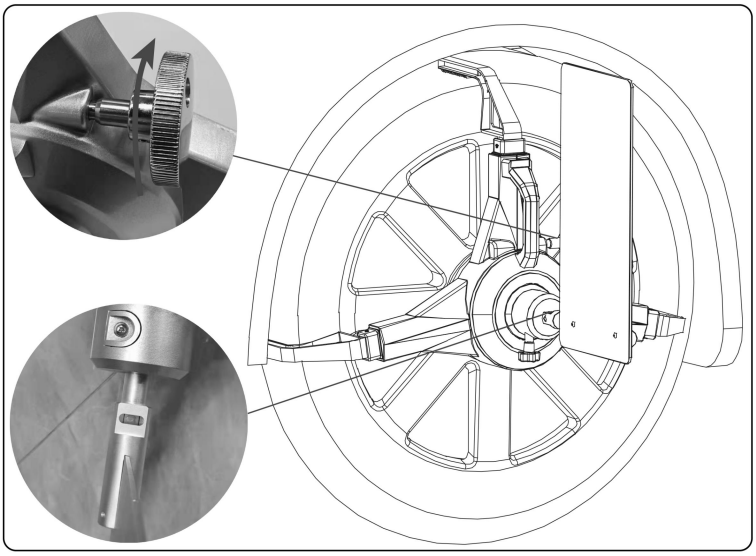

3.2 Activate Software ADAS Calibration Function

Before using the calibration function, the user needs to activate the ADAS function authorization on the diagnostic tool (purchased separately) with the activation card included with the machine.

The specific activation steps are as follows:

*Note: For different diagnostic tool, the access to ADAS function may be different.

1. Start the diagnostic device and enter the software main interface.

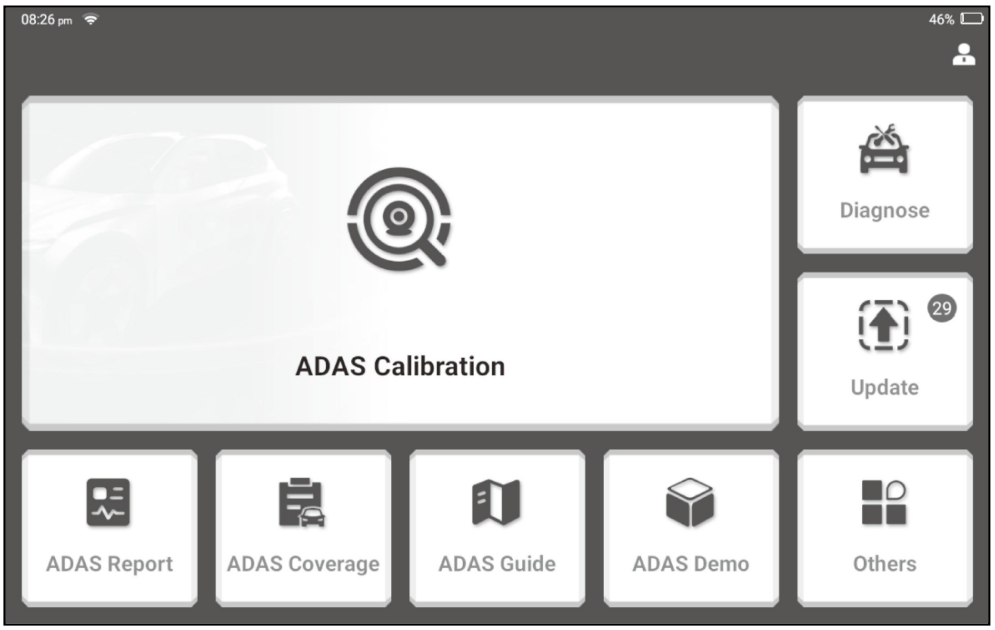

2. Click the "ADAS" icon on the screen, if the ADAS function is not activated, the screen will display as follows:

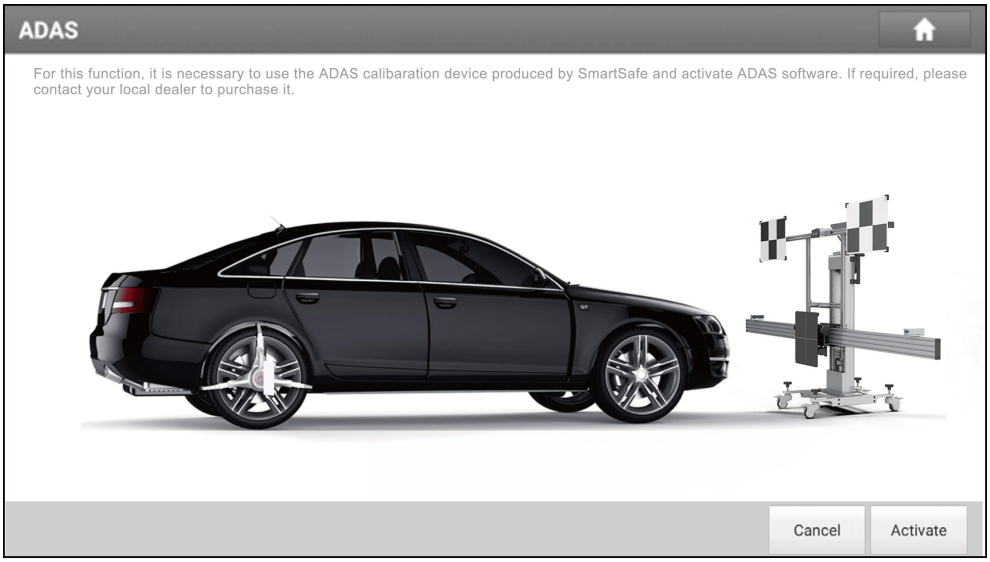

3. Click "Activate" to enter the following interface:

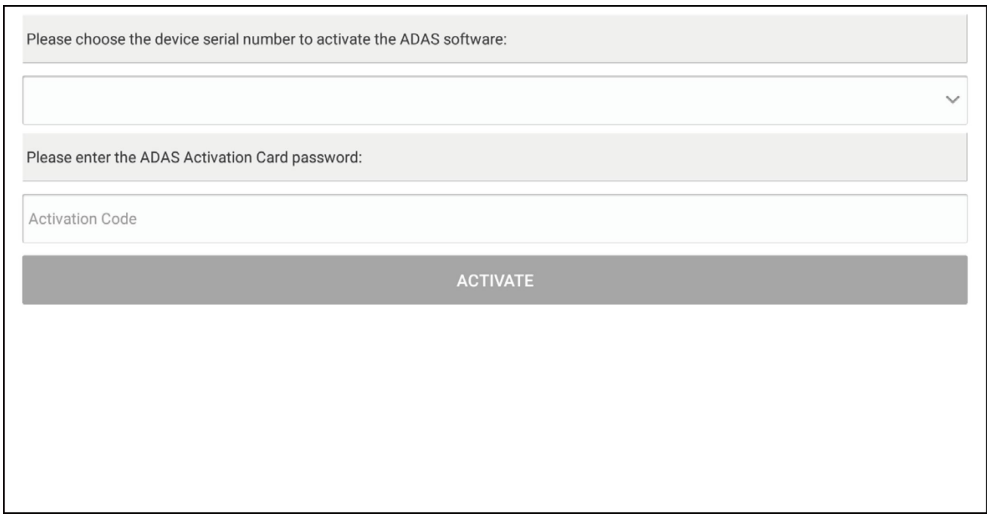

4. Select the correct device serial number, enter the 24-digit activation code (take out the ADAS activation card that comes with the machine, and scratch the coating area to display the activation code), and click "Activate".

5. Complete ADAS activation.

4. Starting to Use ADAS Calibration Equipment

The calibration operation must be carried out in strict accordance with the software prompts on the diagnostic equipment. ADAS calibration can be divided into dynamic calibration and static calibration. For static calibration, it is necessary to use the calibration equipment and the corresponding target or large screen (used to display the corresponding target of various models) to complete. For static calibration, users need to place the calibration equipment in a fixed position in front of the vehicle according to the software prompts and adjust the equipment to be centered parallel to the vehicle, use the correct calibration target, and adjust the target to the height specified by the software.

4.1 Prerequisites for Using the ADAS Calibration Equipment

Reason for calibration:

- Repair or replacement of the sensor control unit (replacement of ACC radar, front camera sensor).
- The sensor deviation angle is outside the normal range (incorrect angle of mounting position).
- The position of the sensor on the vehicle body has changed (the sensor or the component used to fix the sensor has been moved).
- Repair or replace component for fixed sensor (replace bumper, front windshield).
- Adjust the chassis.

Before performing the calibration procedure with the calibration equipment, make sure of the following conditions:

- The part on the vehicle where the sensor is located must not be damaged.
- The fixed sensor component and stand must not be deformed.
- Check the air pressure in the tires and correct to the recommended value if necessary.
- Tighten the parking brake and close the doors.
- Ensure that the vehicle's coolant and oil are within the recommended range and that the fuel is topped up. The vehicle must not be loaded (not carrying passengers or cargo, etc.).
- Connect the VCI to the vehicle and ensure that the vehicle has no fault codes for systems other than those related to ADAS.

- During the calibration process, operators should not lean on the vehicle.

4.1.1 Work Site Dimensions

4.1.1.1 Front Camera

The site requirements for calibrating the front camera are as follows:

Distance A = approximately 2.8 meters (crossbeam width)

Distance B = approximately 1 meter (from crossbeam to wall or fixed object)

Distance C = at least 0.5 meters (from the edge of the crossbeam to other obstacles)

Distance D = varies from vehicle to vehicle, approximately 1.5 meters recommended (from the large screen to the vehicle)

Distance E = reserve approximately 1 meter (from vehicle to other obstacles)

Distance F = at least 0.5 meters (walkway for staff)

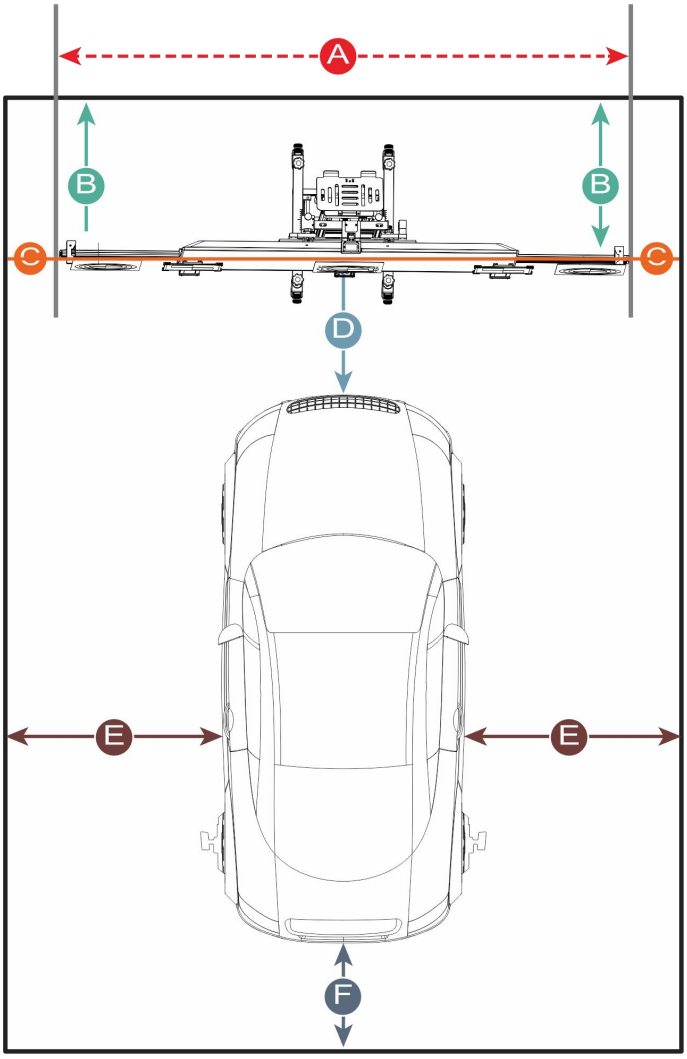

4.1.1.2 Rear View & Surround View Cameras (Optional)

The site requirements for calibrating the rear view camera and the surround view camera depend on the size of the vehicle and the size of the calibration target. The following is a detailed explanation of the the dimensional requirements of the work site, with the largest vehicle and the largest calibration target in different regions as example for user's reference.

American Vehicles:

Distance A = approximately 7.3 meters (the entire width of the work site)

Distance B = approximately 12 meters (the entire length of the work site)

Distance C = at least 0.5 meters (walkway for staff)

Distance D = approximately 1.7 meters (the width of the calibration target, varies from vehicle to vehicle)

Distance E = approximately 2.9 meters (width of the vehicle, varies from vehicle to vehicle)

European vehicles:

Distance A = approximately 4.5 meters (the entire width of the work site)

Distance B = approximately 7 meters (the entire length of the work site)

Distance C = at least 0.5 meters (walkway for staff)

Distance D = approximately 0.8 meters (the width of the calibration target, varies from vehicle to vehicle)

Distance E = approximately 1.9 meters (width of vehicle, varies from vehicle to vehicle)

Asian Vehicle:

Distance A = approximately 6.1 meters (the entire width of the work site)

Distance B = approximately 9.5 meters (the entire length of the work site)

Distance C = at least 0.5 meters (walkway for staff)

Distance D = approximately 1.6 meters (the width of the calibration target, varies from vehicle to vehicle)

Distance E = approximately 1.9 meters (width of vehicle, varies from vehicle to vehicle)

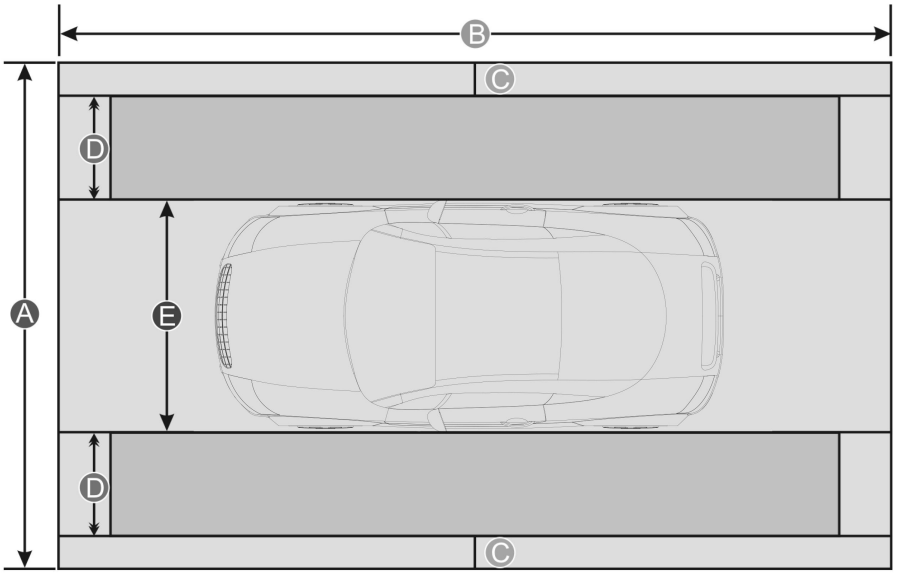

4.1.2 Work Site Floor Requirements

Make sure that all wheels of the vehicle are parked on a level ground.

Correct way:

✓	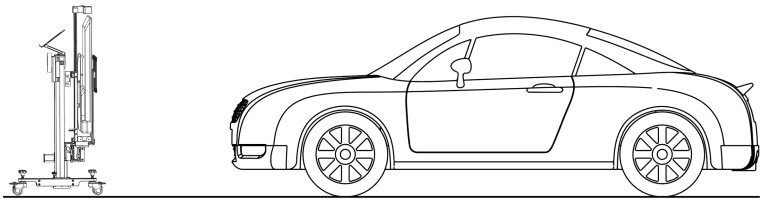

Wrong way:

✗	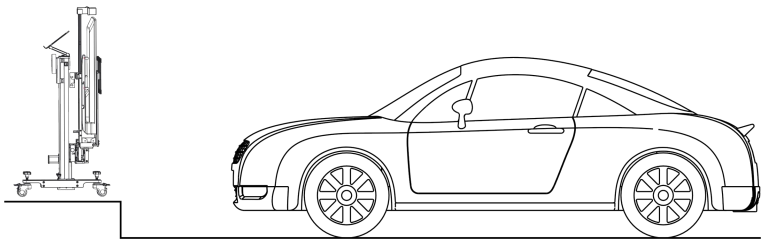
✗	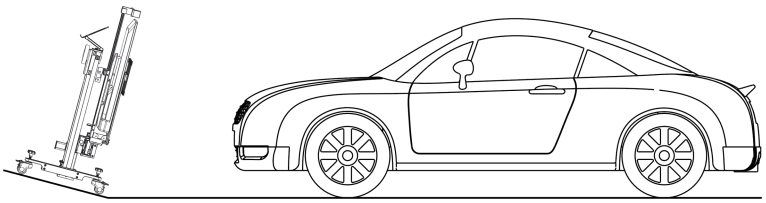

✘	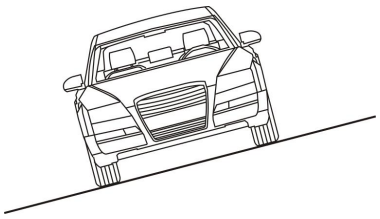

4.1.3 Work site Lighting Requirements

- ✓ The lighting system around the calibration work site shall be a non-frequency flashing source including, but not limited to, LED light sources, industrial lighting in accordance with international standards, and inverted dual light sources.
- ✓ There should be no direct light sources within the camera's field of view, otherwise the camera will reduce the exposure and darken the captured calibration target, which will adversely affect the calibration.
- ✓ Layout the light source appropriately to ensure that there are no reflection points on the calibration target.
- ✓ Lay out the light sources properly to ensure an even distribution of light in the calibration work site
- ✓ Do not change the brightness of the lighting and make sure that there are no other changing light sources around the work site.

4.2 Calibrating the Camera

Before calibration, the diagnostic equipment needs to be connected to the vehicle. The steps are as follows:

1. Click on the "ADAS" icon.
2. Click on "Passenger Cars".
3. Click "ADAS Calibration" to automatically scan for vehicle information and enter the ADAS menu. (If the vehicle is not automatically recognized, you will need to manually select the vehicle model software.)
4. Select the system to be calibrated.

4.2.1 Calibrate Front Camera

When using the ADAS PRO+ V2 to calibrate the front camera of the vehicle, you generally need to follow the steps below:

1. Reset the equipment according to the label on the calibration equipment.
2. Install the wheel clamps and distance measuring panel.
3. Determine the distance of the calibration equipment.
4. Adjust the equipment to be centered parallel to the vehicle.
5. The large screen displays a picture of the target for the corresponding vehicle model.
6. Adjust the height of the target.
7. Execute the calibration function.

Note: The placement of the ADAS PRO+ V2 calibration equipment varies with vehicle models, please refer to the software instructions strictly.

The following is an example of measuring the wheel hub to the target position, and describes the operation steps in detail:

[Step 1] Reset the calibration equipment

Check the following positions of the calibration equipment and reset it:

①Parallel fine-tuning position

②Left-right fine-tuning position

③Front and rear fine-tuning position

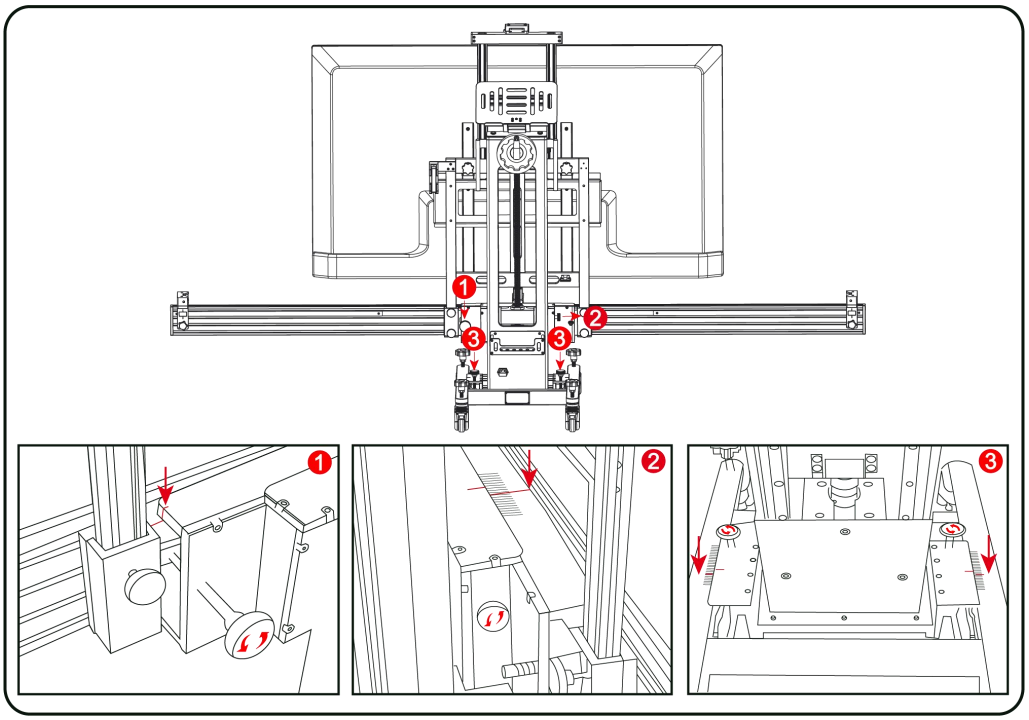

[Step 2] Install the wheel clamps and distance measuring panel.

1. Install the wheel clamps ① on the left and right rear wheels of the vehicle and make sure the level bubble ② is centered.
2. Place the distance measuring panel LAC09-01 in the center of the front wheels of the vehicle and make sure it is perpendicular to the front wheels.

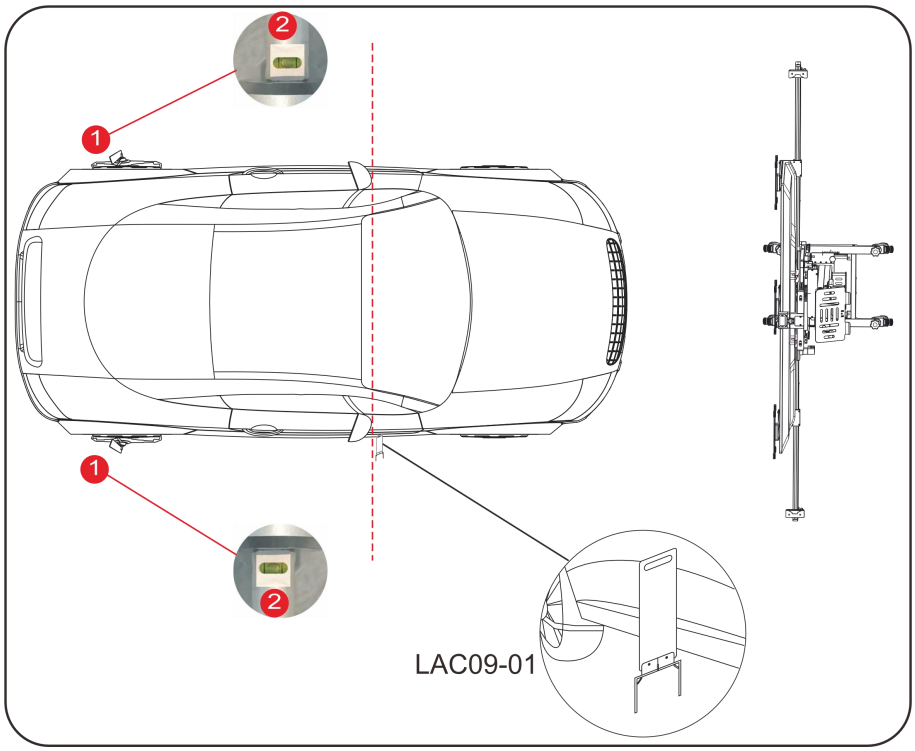

[Step 3] Determine the placement distance of the equipment

1. Turn on the mid-mounted laser LAC09-02 and position the equipment in front of the vehicle so that the laser line shines in the center of the vehicle.
2. Install the distance meter ① on the crossbeam, with the distance meter ① on the same side as the distance measuring panel LAC09-01, and turn on the distance meter so that the laser dot is illuminated on the distance measuring panel LAC09-01.
3. Move the equipment back and forth so that the value of distance meter ① is L (L = the distance prompted by the software).

   Note: If the laser dot does not reach the distance measuring panel, adjust the height of the equipment.

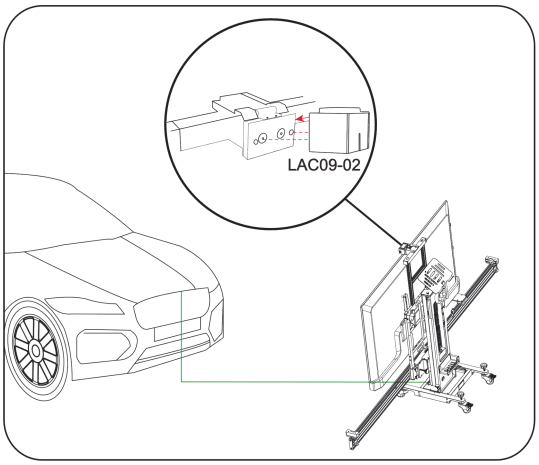

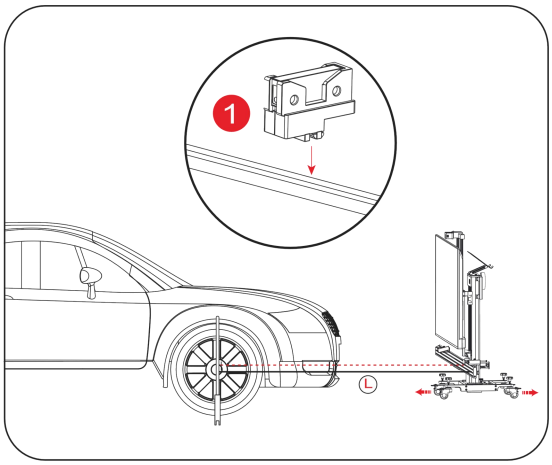

4. Observe the level bubble ②, rotate the base adjustment knob ③, adjust the equipment to level and then lock the moving wheel.

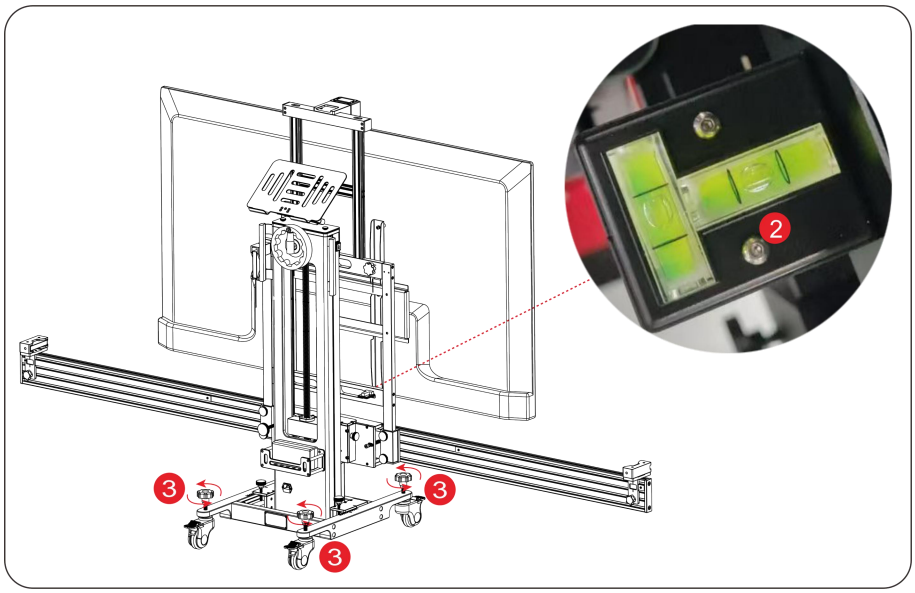

[Step 4] Adjust the equipment to be centered parallel to the vehicle.

1. Turn on and move the distance meter ② on both sides of the crossbeam so that the laser dot shines on the wheel clamp panel.
2. Adjust the parallel fine-tuning knob ③ so that the value of distance meter ② on both sides is the same (allowable error: ±1mm).
3. Check whether the value of distance meter ① is still L (L=distance prompted by the software), if not, you can adjust it by unlocking the front and rear fine-tuning knobs ④.

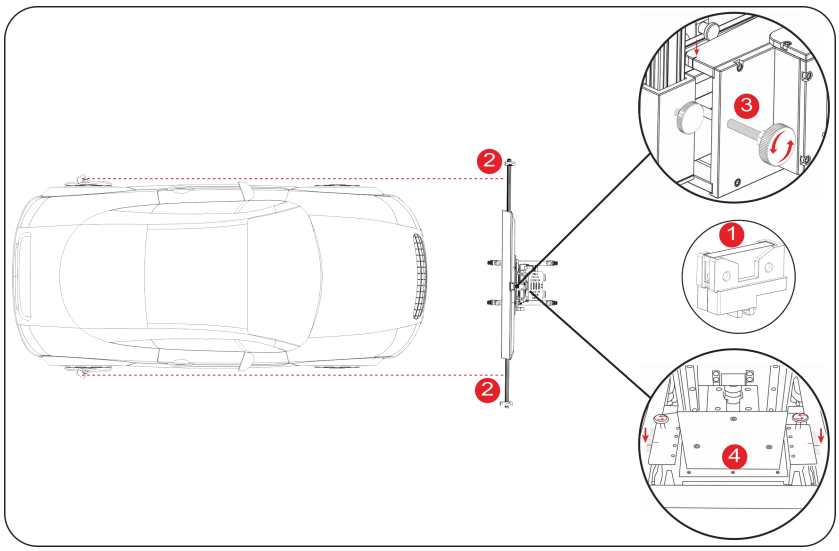

4. Adjust the left and right fine-tuning knobs ⑤ ,so that the mid-mounted laser LAC09-02 laser line shines in the center of the vehicle.

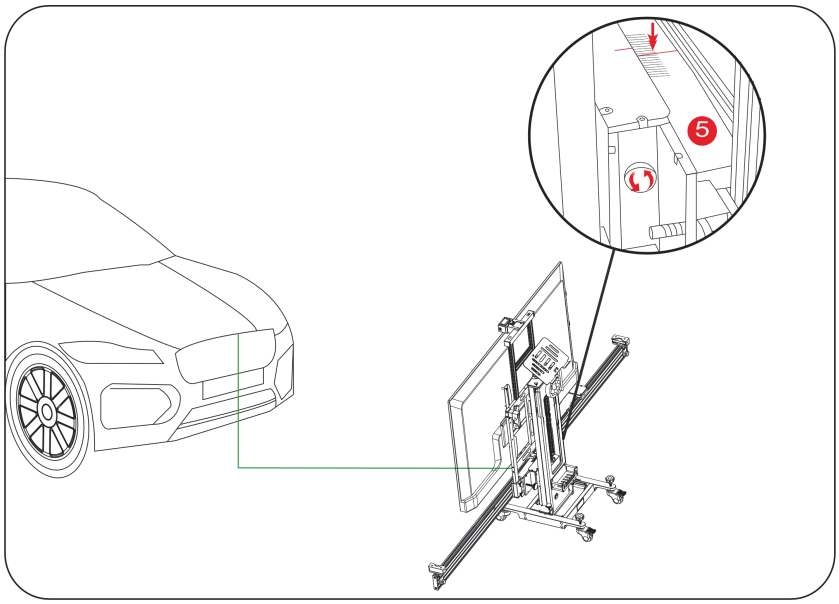

5. Turn off and remove the mid-mounted laser LAC09-02.

[Step 5] According to the vehicle model to be calibrated, the corresponding electronic target will be displayed on the large screen.

[Step 6] Follow the software prompts to adjust the height of the target.

Turn on the height distance meter ① and adjust the height of the equipment so that the value of the height distance meter ① is H (H=height prompted by the software).

Note: Please make sure that the laser irradiation area is free of water stains and other reflections that affect the measurement results.

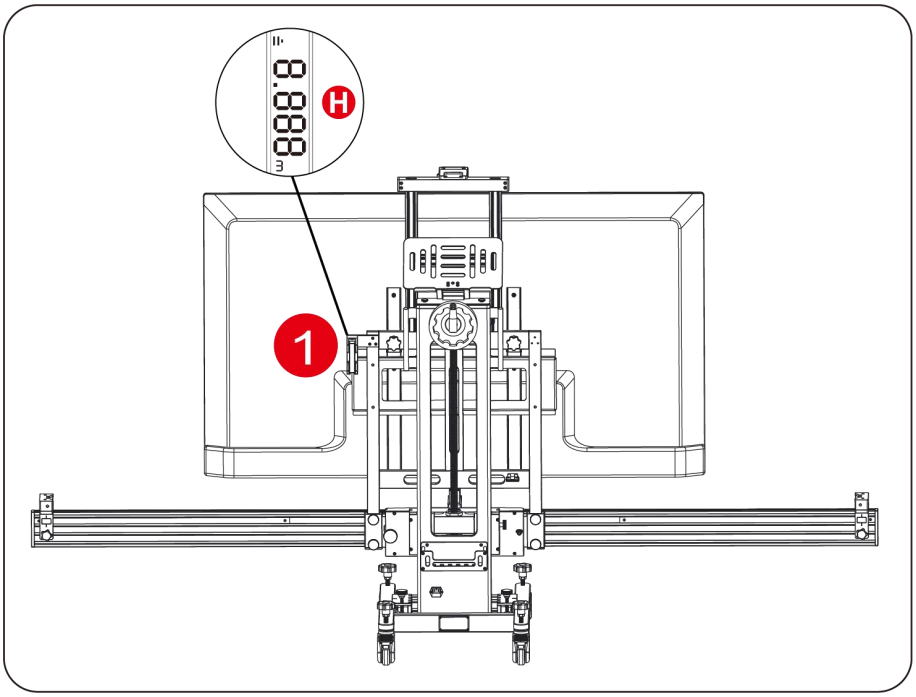

[Step 7] Perform calibration

Perform the calibration function according to the software prompts, and save the ADAS report after the calibration is completed.

[Precautions to be taken after calibration is completed]

It is recommended to re-scan the system after calibration is completed to confirm that the fault has been solved.

4.2.2 Calibrate Rear View Camera & Surround View Camera

When calibrating the rear view camera or surround view camera, there is no need to use ADAS PRO+ V2 calibration equipment, just select the rear view or surround view calibration target of the corresponding car model, and place the target in the corresponding position

according to the software prompts.

4.3 Calibrate Radar Sensor

ADAS PRO+ V2 calibration equipment can be used with a variety of radar sensors calibration target (optional) to calibrate the radar sensors of ADAS. When using the ADAS PRO+ V2 for vehicle radar sensor calibration, you generally need to follow the steps below (take ACC radar for example):

1. Reset the calibration equipment.
2. Install the wheel clamps and distance measuring panel.
3. Determine the placement distance of the equipment.
4. Adjust the equipment to be centered parallel to the vehicle.
5. Install ACC reflector panel LAM05-02 (optional) and adjust the horizontal position.
6. Adjust the height.
7. Adjust the angle.
8. Adjust the orientation of the ACC radar sensor.
9. Complete the calibration.

The following describes the procedure in detail:

[Step 1] Reset the calibration equipment

Check the following positions of the calibration equipment and reset it:

①Parallel fine-tuning position

②Left-right fine-tuning position

③Front and rear fine-tuning position

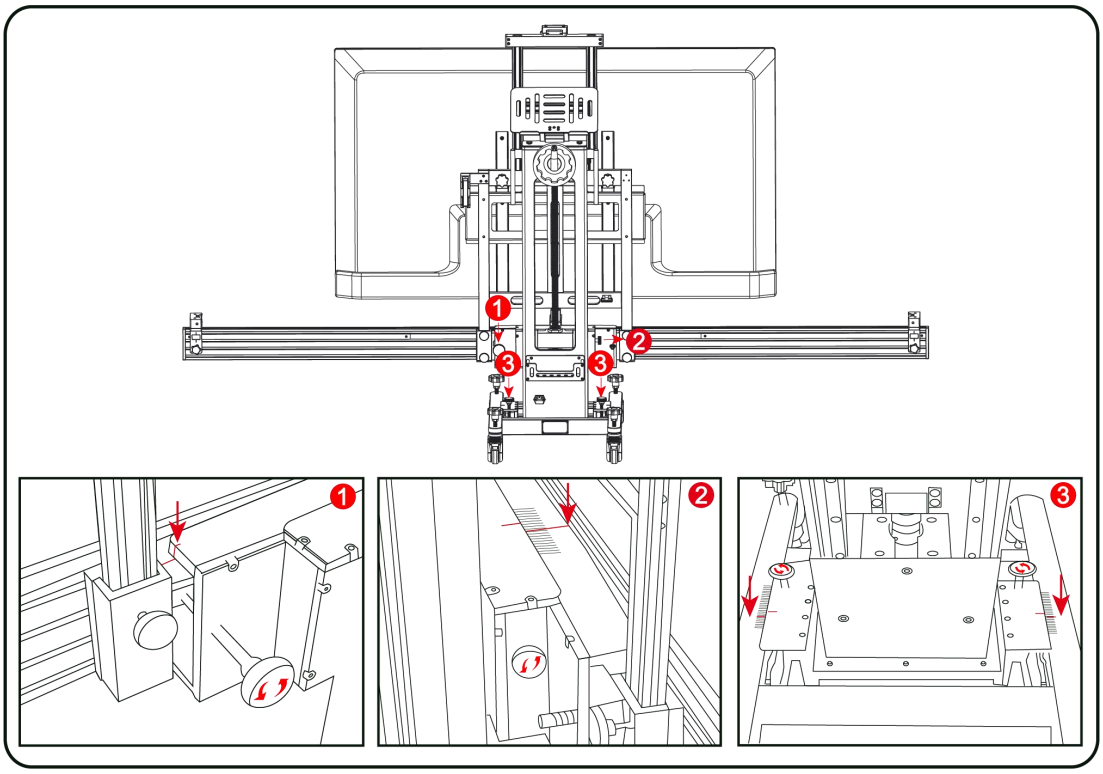

[Step 2] Install the wheel clamps and distance measuring panel.

1. Install the wheel clamps ① on the left and right rear wheels of the vehicle and make sure the level bubble ② is centered.

2. Place the distance measuring panel LAC09-01 in front of the vehicle and make sure it is close to the bumper and parallel to the vehicle.

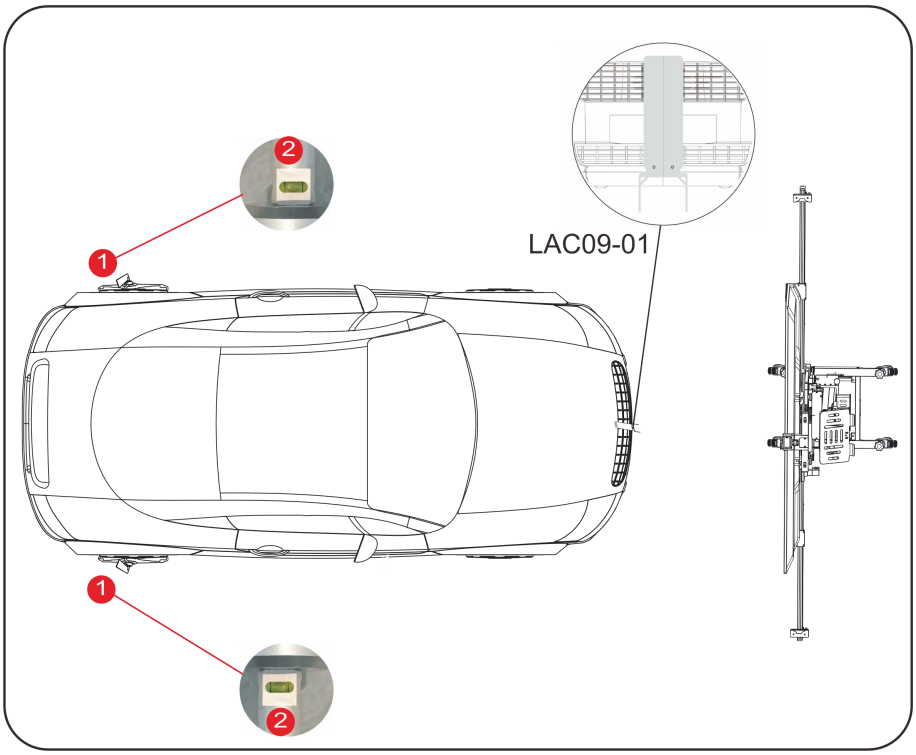

[Step 3] Determine the placement distance of the equipment

1. Place the mounting panel LAC09-03 on the crossbeam so that its centering mark is aligned with the center of the crossbeam.
2. Attach the mid-mounted laser LAC09-02 to the mounting plate LAC09-03, turn on the laser, and position the equipment in front of the vehicle so that the laser line shines in the center of the vehicle.
3. Install the distance meter① in the center area of the crossbeam, and turn on the distance meter so that the laser dot shines on the distance measuring panel LAC09-01.

4. Move the equipment back and forth so that the value of the distance meter ① is L (L = distance prompted by the software).

Note: If the laser dot does not reach the distance measuring panel, adjust the height of the equipment.

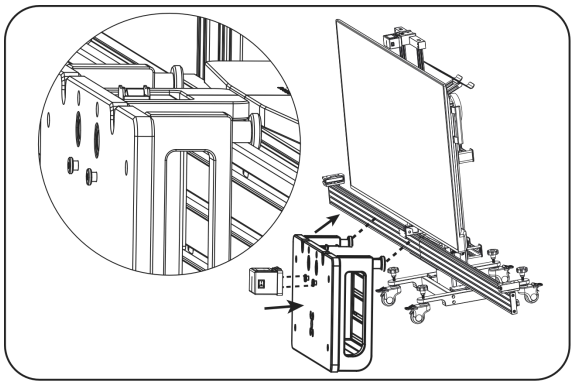

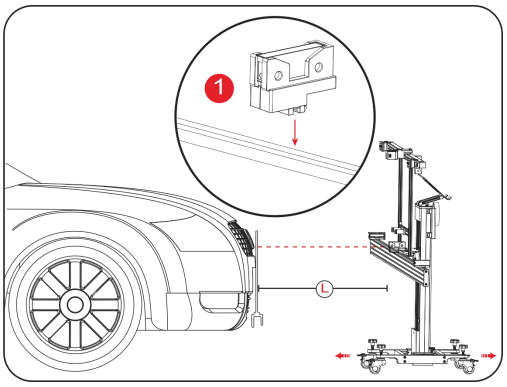

[Step 4] Adjust the equipment to be centered parallel to the vehicle.

1. Turn on and move the distance meter ② on both sides of the crossbeam, so that the laser dot shines on the wheel clamp panel.
2. Adjust the parallel fine-tuning knob ③ so that the value of the distance meter ② on both sides is the same (allowable error: ±1mm).
3. Check whether the value of distance meter ① is still L (L=distance prompted by the software), if not, you can adjust it by unlocking the front and rear fine fine-tuning knobs ④.

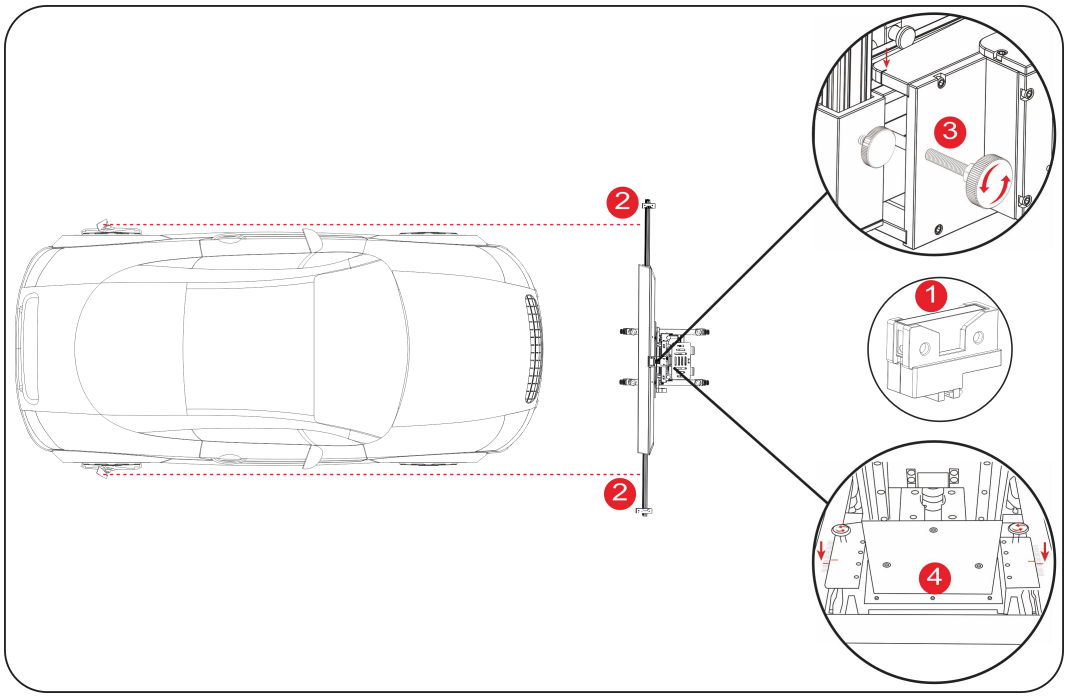

4. Adjust the left and right fine-tuning knobs ⑤ so that the laser line of the mid-mounted laser LAC09-02 shines in the center of the vehicle.

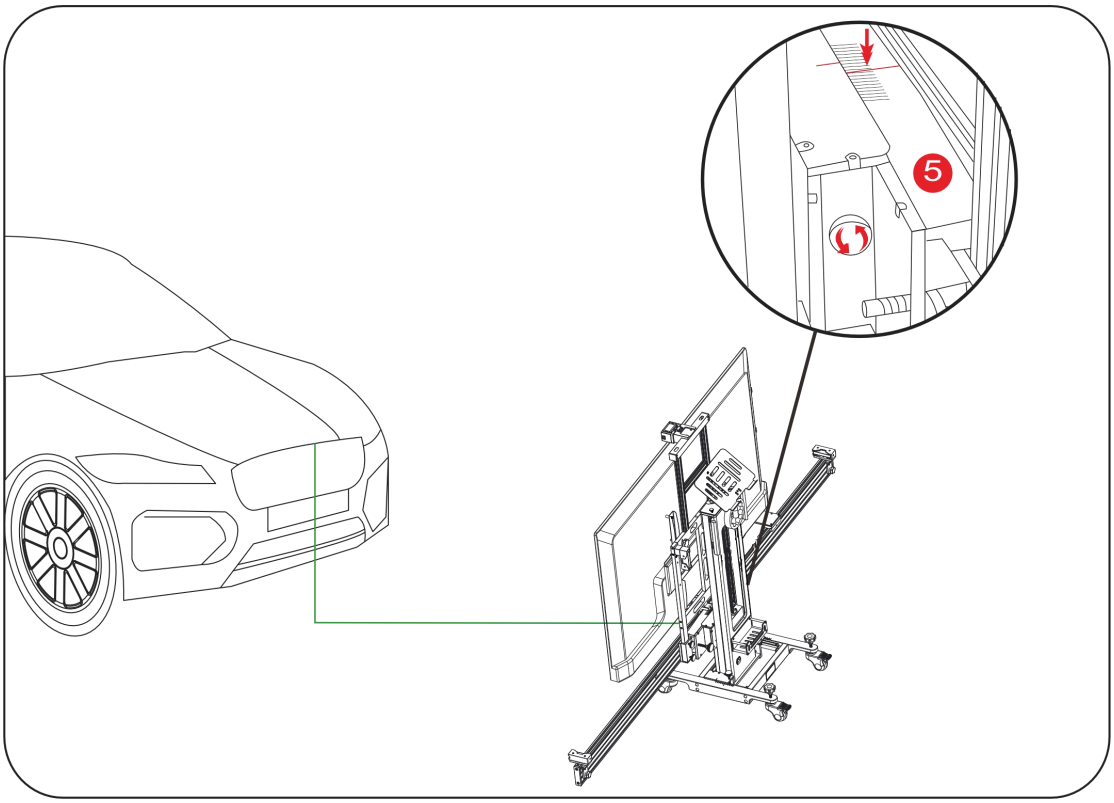

[Step 5] Install the ACC reflector panel LAM05-02 (optional) and adjust the horizontal position.

1. Remove the mid-mounted laser LAC09-02 and install the ACC reflector panel LAM05-02 (optional).
2. Adjust the position of the ACC reflector panel LAM05-02 (optional) to position 2.

3. Observe the level bubble ① on the ACC reflector panel LAM05-02 (optional), and if adjustment is necessary, unlock the individual wheels on the side to be adjusted and adjust the level position.

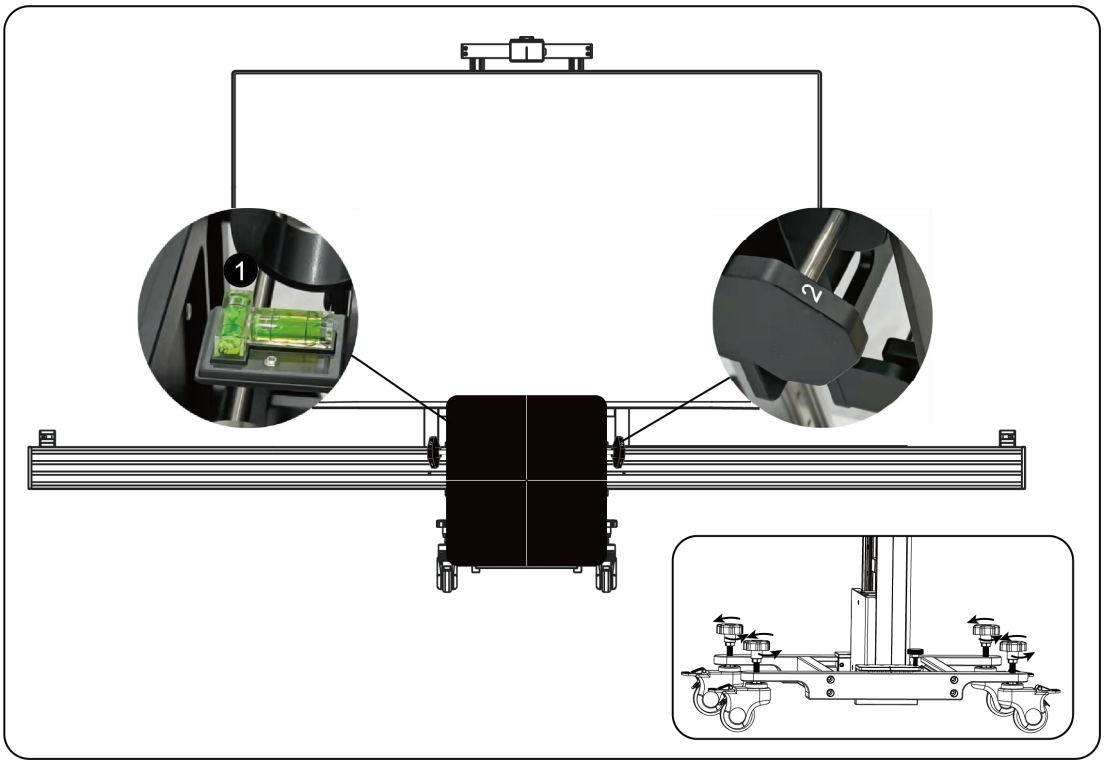

[Step 6] Adjust the height

1. Turn on the laser ray on the mounting plate LAC09-03 (optional).
2. Adjust the height of the ADAS PRO+ V2 so that the laser dot shines on the center of the radar sensor.

Note: In case of radar sensor with mirror, you need to shoot the laser dot at the small mirror position of the radar sensor and make sure that the laser ray can be reflected back to the center position of ACC reflector panel LAM05-02 (optional).

[Step 7] Adjust the angle

1. Adjust the ACC reflector panel LAM05-02 (optional) to position 1.

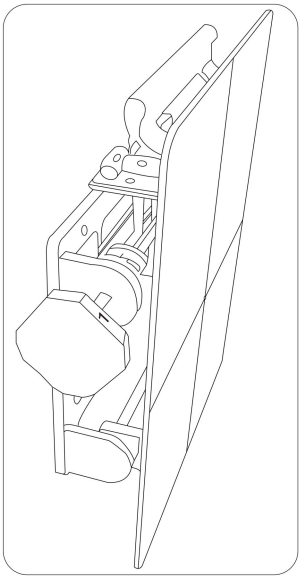

2. Adjust the ACC reflector panel LAM05-02 (optional) to position 2.

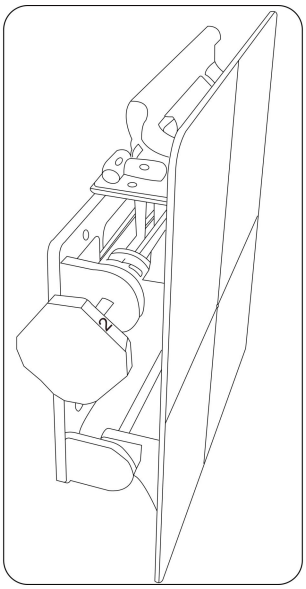

3. Adjust the ACC reflector panel LAM05-02 (optional) to position 3.

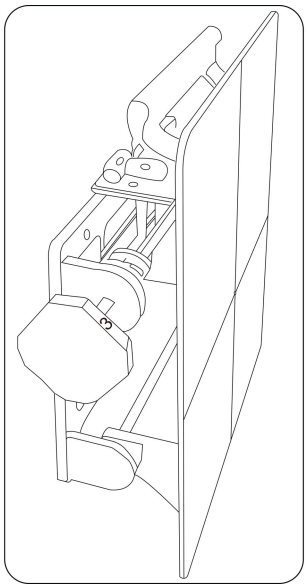

[Step 8] Adjusting the ACC Radar Sensor Orientation

If you need to adjust the sensor position, follow the software prompts to adjust the two adjusting bolts using the adjusting screw and perform the [Step 7] operation again. Skip this step if no adjustment is required.

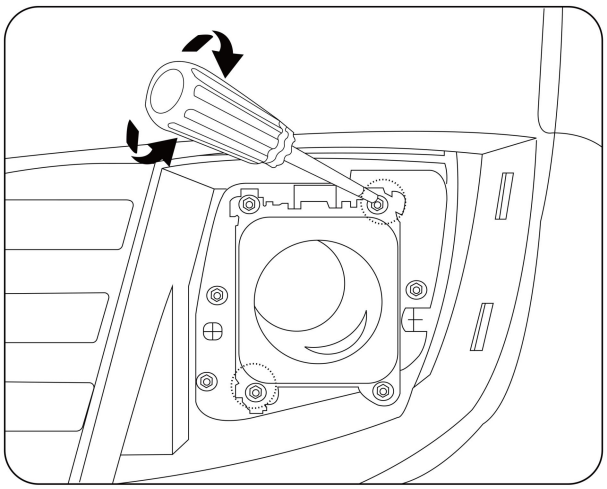

[Step 9] Calibration completed

You can save the ADAS report after the calibration is completed.

[Precautions to be taken after calibration is completed]

It is recommended to re-scan the system after calibration is completed to confirm that the fault has been solved.

5. Maintenance and Care

- When operating the ADAS calibration equipment, each accessory should be handled with caution.
- Use acid-free and resin-free grease or oil to periodically wipe down removable parts.
- Clean the ADAS calibration equipment regularly with a mild detergent.
- If using a standard household cleaner, spray it on a damp towel and use it.
- If there is any damage to the components, be sure to replace it immediately with an original replacement component.

6. Appendix: Calibration Target

6.1 Front Camera Calibration Target

6.1.1 Electronic Target (Standard)

Note: Use the large screen to display the electronic target.

No.	Target name	Target number	Reference picture
1	Benz front camera target	LAM01-01	
2	VOLKSWAGEN front camera target	LAM01-02	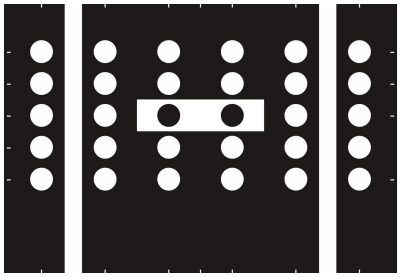
3	TOYOTA front camera target	LAM01-06-1 (for reference)	
4	TOYOTA front camera target	LAM01-06-2 (for reference)	

5	TOYOTA front camera target	LAM01-06-3 (for reference)	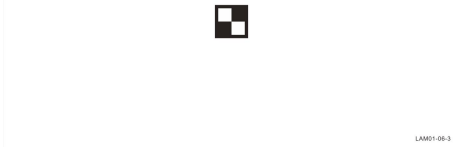
6	TOYOTA front camera target	LAM01-06-4 (for reference)	
7	Nissan front camera target	LAM01-07	
8	HYUNDAI front camera target	LAM01-09	
9	Mazda front camera target	LAM01-10	

10	Romeo front camera target	LAM01-11	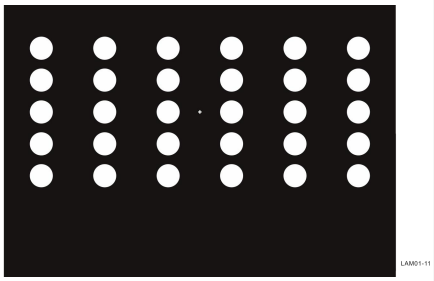
11	Nissan/Renault front camera target	LAM01-12	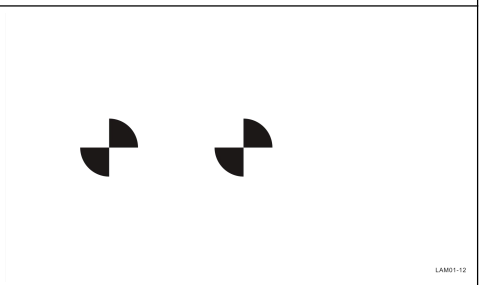
12			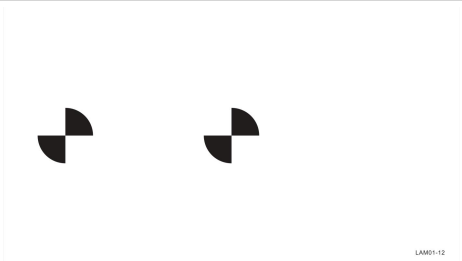
13	Subaru front camera target	LAM01-15	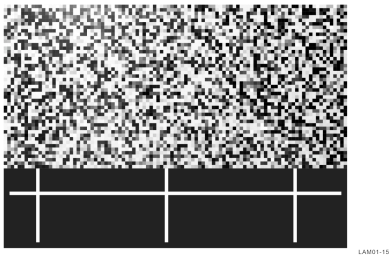
14	Mazda front camera target	LAM01-16	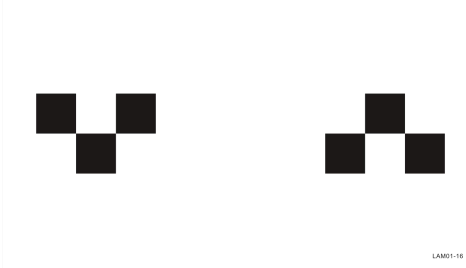

15	HONDA front camera target	LAM01-17 (for reference)	
16	Suzuki front camera target	LAM01-18	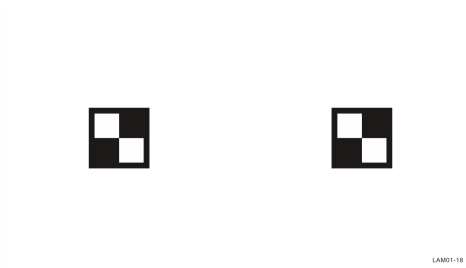
17	Mitsubishi front camera target	LAM01-19	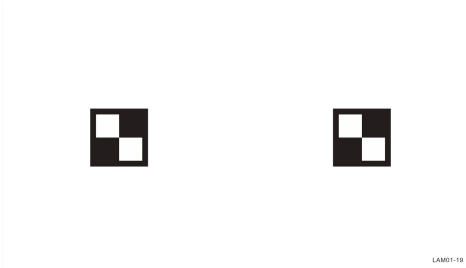
18	Subaru front camera target	LAM01-21	
19	Sprint front camera target	LAM01-23	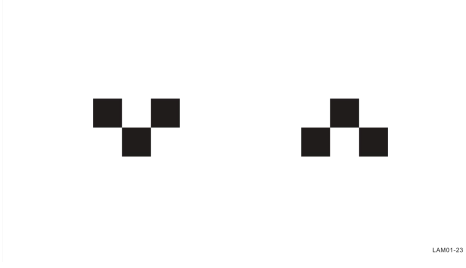

20	Suzuki front camera target	LAM01-25	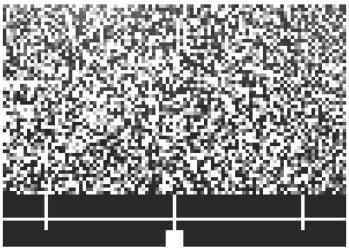
21	Daihatsu front camera target	LAM01-30	
22	Maserati front camera target	LAM01-32	
23	Leapmotor front camera target	LAM01-35	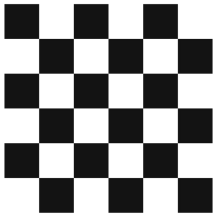
24	Tesla front camera target	LAM01-36	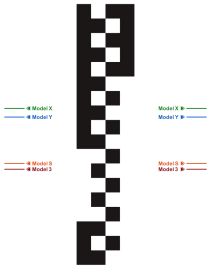

6.1.2 Physical Target (Optional)

Note: The physical targets in this section must be used in conjunction with the physical target stand (optional).

No.	Target name	Target number	Reference picture	Quantity
1	HONDA front camera target	LAM01-04-L	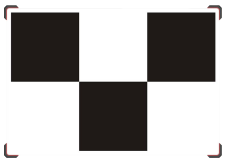	1
2	HONDA front camera target	LAM01-04-R	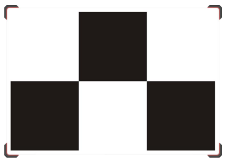	1
3	HONDA front camera target	LAM01-20	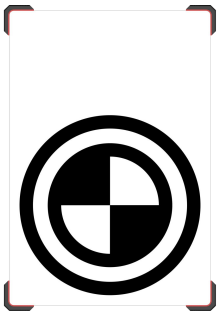	1
4	Subaru front camera target	LAM01-31	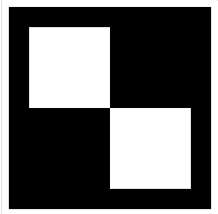	3

6.2 Radar Target (Optional)

No.	Target name	Target number	Reference picture	Quantity
1	ACC radar target (including mounting plate)	ACC reflector panel LAM05-02	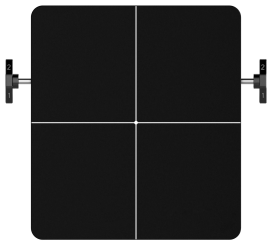	1
		Mounting plate LAC09-03		1
2	Tapered radar target	LAC05-03		1
3	Doppler Simulator	LAC05-04		1
4	Volkswagen/Audi LIDAR Target	LAC05-06		1

6.3 Rear View & Omnidirectional Target (Optional)

6.3.1 Rear View& Omnidirectional Target (Asia)

No.	Target name	Target number	Reference picture	Quantity
1	HONDA omnidirectional target	LAC04-01		4
		LAC04-02		1
2	Nissan rear view target	LAC04-11	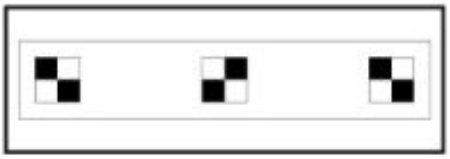	1
3	Hyundai/Kia-AVM	LAC04-31-1		2
		LAC04-31-2		2
		LAC04-31-3		4
4	Mitsubishi omnidirectional target	LAC04-13		2
5	Nissan rear view target	LAC04-15	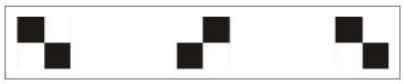	1
6	TOYOTA omnidirectional target	LAC04-16-1		4
		LAC04-16-2		6

		LAC04-16-3		2
		LAC04-16-4		2
7	HONDA Blind Spot Indicator Target	LAC04-17	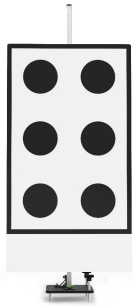	1
8	Nissan rear view target	LAC04-24	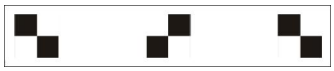	1
9	TOYOTA rear view target	LAC04-25	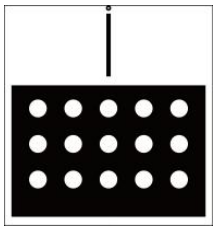	1

6.3.2 Rear View & Omnidirectional Target (USA)

No.	Target name	Target number	Reference picture	Quantity
1	Cadillac omnidirectional target	LAC04-06		1
2	Ford omnidirectional target	LAC04-07		2

6.3.3 Rear View & Omnidirectional Target (Europe)

No.	Target name	Target number	Reference picture	Quantity
1	Benz rear view target	LAC02-02		1
2	VOLKSWAGEN rear view target	LAC02-03		1
3	VOLKSWAGEN omnidirectional target	LAC04-04		2
4	Benz omnidirectional target	LAC04-08-01	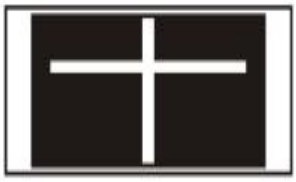	1
		LAC04-08-02		1

5	Reynolds omnidirectional target	LAC04-10-01		1
		LAC04-10-02	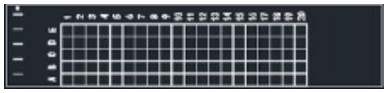	1
6	VOLKSWAGEN omnidirectional target	LAC04-14		2
7	Porsche omnidirectional target	LAC04-05-1		2
		LAC04-05-2		2

1. Rear View & Omnidirectional Target (China)

No.	Target name	Target number	Reference picture	Quantity
1	Rongwei omnidirectional target	LAC04-18		4
2	BYD omnidirectional target	LAC04-19-1		2
		LAC04-19-2	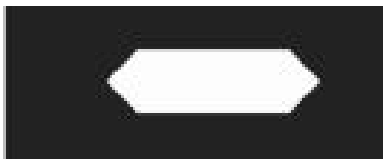	2
3	Wuling/Baojun omnidirectional target	LAC04-20-1		1
		LAC04-20-2		1
		LAC04-20-3	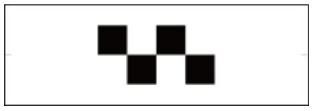	2
4	LYNK&CO omnidirectional target	LAC04-23	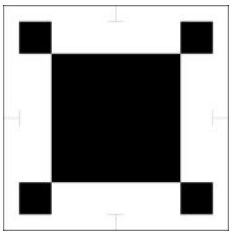	1

5	Haval omnidirectional target	LAC04-27	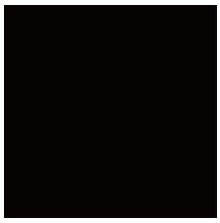	4

6.3.4 Night Vision target

No.	Target name	Target number	Reference picture	Quantity
1	VOLKSWAGEN night vision target	LAC06-01		1
2	Benz night vision target	LAC06-02		1

Warranty

THIS WARRANTY IS EXPRESSLY LIMITED TO PERSONS WHO PURCHASE SMARTSAFE PRODUCTS FOR PURPOSES OF RESALE OR USE IN THE ORDINARY COURSE OF THE BUYER'S BUSINESS.

SMARTSAFE electronic product is warranted against defects in materials and workmanship for one year from date of delivery to the user.

This warranty does not cover any part that has been abused, altered, used for a purpose other than for which it was intended, or used in a manner inconsistent with instructions regarding use. The exclusive remedy for any automotive meter found to be defective is repair or replacement, and SMARTSAFE shall not be liable for any consequential or incidental damages.

Final determination of defects shall be made by SMARTSAFE in accordance with procedures established by SMARTSAFE. No agent, employee, or representative of SMARTSAFE has any authority to bind SMARTSAFE to any affirmation, representation, or warranty concerning SMARTSAFE automotive meters, except as stated herein.

Disclaimer

The above warranty is in lieu of any other warranty, expressed or implied, including any warranty of merchantability or fitness for a particular purpose.

Purchase Order

Replaceable and optional parts can be ordered directly from your SMARTSAFE authorized tool supplier. Your order should include the following information:

Order quantity
Part number
Part name

Customer Service Center

For any problem met during the operation, please call +86-0755-89589810.

If the device needs to be repaired, please send it back to SmartSafe, and attach the Warranty Card, Product Qualification Certificate, Purchase Invoice and problem description. SmartSafe will maintain and repair the device for free when it is within warranty period. If it is out of warranty, SmartSafe will charge the repair cost and return freight.

SmartSafe address:

Building 1, Shanglilang Zhichuangyuan, Nanwan Street, Longgang District, Shenzhen, Guangdong, China

SmartSafe Website: http: //www.newsmartsafe.com

Statement:

SMARTSAFE reserves the rights to make any change to product designs and specifications without notice. The actual object may differ a little from the descriptions in the manual in physical appearance, color and configuration. We have tried our best to make the descriptions and illustrations in the manual as accurate as possible, and defects are inevitable, if you have any question, please contact local dealer or after-sale service center of SMARTSAFE, SMARTSAFE does not bear any responsibility arising from misunderstandings.