Copyright Information

Copyright © 2021 by SHENZHEN SMARTSAFE TECH CO.,LTD. All rights reserved. No part of this publication may be reproduced, stored in a retrieval system, or transmitted in any form or by any means, electronic, mechanical, photocopying, recording or otherwise, without the prior written permission of SMARTSAFE.

Neither SMARTSAFE nor its affiliates shall be liable to the purchaser of this unit or third parties for damages, losses, costs, or expenses incurred by purchaser or third parties as a result of: Accident, misuse, or abuse of this unit, or unauthorized modifications, repairs, or alterations to this unit, or failure to strictly comply with SMARTSAFE operating and maintenance instructions. SMARTSAFE shall not be liable for any damages or problems arising from the use of any options or any consumable products other than those designated as Original SMARTSAFE Products or SMARTSAFE Approved Products by SMARTSAFE.

All information, specifications and illustrations in this manual are based on the latest information available at the time of printing. SMARTSAFE reserves the right to make changes at any time without prior written or oral notice.

Trademark Information

SmartSafe is a registered trademark of SHENZHEN SMARTSAFE TECH CO.,LTD. in China and other countries. All other SMARTSAFE trademarks, service marks, domain names, logos, and company names referred to in this manual are either trademarks, registered trademarks, service marks, domain names, logos, company names of SMARTSAFE or are otherwise the property of SMARTSAFE or its affiliates. In countries where any of the SMARTSAFE trademarks, service marks, domain names, logos and company names are not registered, SMARTSAFE claims other rights associated with unregistered trademarks, service marks, domain names, logos, and company names. Other products or company names referred to in this manual may be trademarks of their respective owners. You may not use any trademark, service mark, domain name, logo, or company name of SMARTSAFE or any third party without permission from the owner of the applicable trademark, service mark, domain name, logo, or company name. You may contact SMARTSAFE by visiting the website at www.newsmartsafe.com, or writing to SHENZHEN SMARTSAFE TECH CO.,LTD., 3310, Building 11, Tian'an Cloud Park, Bantian Street, Longgang District, Shenzhen, China to request written permission to use Materials on this manual for purposes or for all other questions relating to this manual.

Safety Precautions

The ADAS LITE calibration tool is exclusively intended for use on a vehicle. To avoid personal injury, property damage, or accidental damage to the product, read all of the information in this section before using the product:

- To operate the ADAS LITE calibration tool properly, user must have knowledge of automotive technology and is therefore aware of the sources of danger and risks in the repair shop and on vehicles.
- All notes given in the individual sections of the operating instructions apply. In principle it is required to follow the steps and safety precautions stated below.
- Furthermore, pay attention to all general instructions from labor inspectorates, trade associations and vehicle manufacturers as well as all laws, legal ordinances and instructions which have to be commonly obeyed by a repair shop.

The safety messages herein cover situations SMARTSAFE is aware of. SMARTSAFE cannot know, evaluate or advise you as to all of the possible hazards. You must be certain that any conditions or service procedure encountered do not jeopardize your personal safety.

Warning Symbols and Definitions	
	Indicates that there is a serious hazard. If it is not evaded or wrongly operated, it will cause death or serious injury to the user.
	Indicates that there is a potentially dangerous situation. If it is not circumvented or wrongly operated, it will cause minor injuries or property damage.
	Indicates the points of attention when using and the use situation to be avoided as much as possible.

The exhaust gas from the engine contains a variety of toxic compounds (such as hydrocarbons, carbon monoxide, nitrogen oxides, etc.), which can cause unresponsiveness, and even serious personal injury or death. The vehicle under test should be parked in a well-ventilated place during operation.

It is forbidden to replace the built-in lithium battery by yourself, and the internal battery must be replaced by an authorized maintenance organization or authorized technician. Modification of the battery pack or improper replacement of the battery pack can cause an explosion.

Please read all safety warnings and operating information carefully. Failure to follow the safety warnings and operating information may result in electric shock, fire or serious personal injury.

1. Always keep the vehicle calibration in a safe environment.

2. Do not connect or disconnect the diagnostic equipment when the ignition switch is on or the engine is running.

3. Do not operate the diagnostic equipment while driving the vehicle to avoid distraction and cause a car accident.

4. Before starting the engine, the hand brake should be pulled, especially the front wheels should be blocked, and the gear lever should be placed in Neutral (manual transmission) or [P] position (automatic transmission) to avoid starting the engine and causing the vehicle to rush out and hurt people .

5. No smoking or sparks near the battery or engine. Do not operate the calibration tool in an explosive environment.

6. Please provide a fire extinguisher next to the workplace.

7. Please wear protective glasses when inspecting the car.

8. Make anti-rolling settings for the vehicle.

9. Be extremely careful when working around the ignition coil, distributor cap, ignition circuit and ignition plug. The voltage generated by these components when the engine is running is very dangerous.

10. To avoid damaging the diagnostic device or generating incorrect data, please ensure that the vehicle battery is sufficiently charged and the connection of vehicle diagnostic link connector is clean and safe.

Precautions for Operating ADAS LITE Calibration Tool

To avoid user injury or calibration tool damage caused by improper operation, please pay attention to the following points:

- Please be sure to install it in accordance with the method described in the manual.
- Prevent ADAS LITE from contacting water and being violently impacted.
- Prevent ADAS LITE from long-time sunlight.
- The light source should ensure that there are no reflection points on the calibration target.
- There should be no direct light source in the camera's field of view, otherwise the camera will reduce the exposure and darken the captured calibration target, which will adversely affect the calibration.
- The light source should ensure that the illumination of the calibration work site is evenly distributed.
- Please maintain ADAS LITE regularly.

Precautions for Operating the Vehicle

When performing calibration operations, please read the following information carefully:

- Ensure that all wheels of the vehicle are parked on level ground.
- Set the gear position to P (parking) state for Automatic Transmission vehicles.
- During the test, make sure the connection between the diagnostic device and the diagnostic link connector is good which is to avoid signal interruption affecting the test.
- The vehicle system is operating normally and there is no fault stored in the ECU DTC memory.
- To avoid losing the connector, please make sure to remove it from the vehicle diagnostic link connector after use.

Precautions for Using Laser Equipment

- Please store in a dry place.
- The laser beam is projected directly into the eyes, which can cause eye damage.
- Do not look directly at the laser beam.
- Please fix the laser level, do not point the laser beam at people or animals.
- Do not operate the laser level around children. Do not allow children to use laser equipment.
- Do not use a magnifying glass or telescope to observe the laser beam.
- Do not tear off or scratch the warning labels on the laser equipment.
- Do not bring the instrument close to the pacemaker.
- The instrument must be far away from magnetic data carriers and machines that are easily disturbed by magnetic fields.
- Do not operate the instrument in an explosive environment, such as an environment with flammable liquid, gas or dust.
- Do not use strong detergents or chemicals to clean the instrument. The instrument can be cleaned with water or a small amount of soap with water.
- Please prevent the instrument from falling down.

- Remove the battery when not using the instrument for a long time.
- When installing the laser, make sure that it is firmly installed.

Laser recognition glasses cannot be used as protective glasses. After wearing laser recognition glasses, it can help you identify lasers, but they cannot protect you from laser radiation.

Contents

1. Product Introduction 1
1.1 About ADAS 1
1.2 About ADAS LITE 1
1.3 Packing List 1
2. Get to Know ADAS LITE Calibration Tool 3
2.1 Main Components 3
2.2 Base Components 4
2.3 Beam Lifter 4
2.4 Target Holder Components 5
2.5 Central Laser (LAM09-02) 7
3. Initial Use 8
3.1 Install The ADAS Calibration Tool 8
3.2 Activate ADAS Function 8
4. Start Using ADAS Calibration Tool 10
4.1 Prerequisites for Using ADAS Calibration Tool 10
4.1.1 Workstation size 10
4.1.2 Workstation Ground 12
4.1.3 Workstation lighting 13
4.2 Calibrating Camera-based ADAS 13
4.2.1 Calibrating the Front Camera 13
4.2.2 Calibrating the Rear Camera & AVM Camera 21
4.3 Calibrating the Radar Sensor 21
5. Service and Maintenance 25

1. Product Introduction

1.1 About ADAS

ADAS stands for "Advanced Driver Assistance System". Its principle is to use vehicle cameras, radars, distance measurement and other sensors to sense the surrounding environment, collect data, and perform identification, detection and tracking for static and dynamic objects at any time during vehicle driving. Combined with the navigation map data, perform system calculation and analysis, so as to allow the driver to perceive the possible danger in advance, which effectively increase the comfort and safety of driving.

The cameras and sensors used in ADAS must be precisely calibrated and adjusted. Incorrect calibration will cause the system to output incorrect results or even completely fail, resulting in serious accidents or even death.

1.2 About ADAS LITE

As a comprehensive and portable calibration tool, the ADAS LITE calibration tool of SmartSafe enables you to effectively and accurately calibrate various types of camera and radar driving assistance systems, such as the front camera for the Lane Departure Warning System, radar sensors for ACC (Adaptive Cruise Control) and more.

The ADAS LITE calibration tool has two main components:

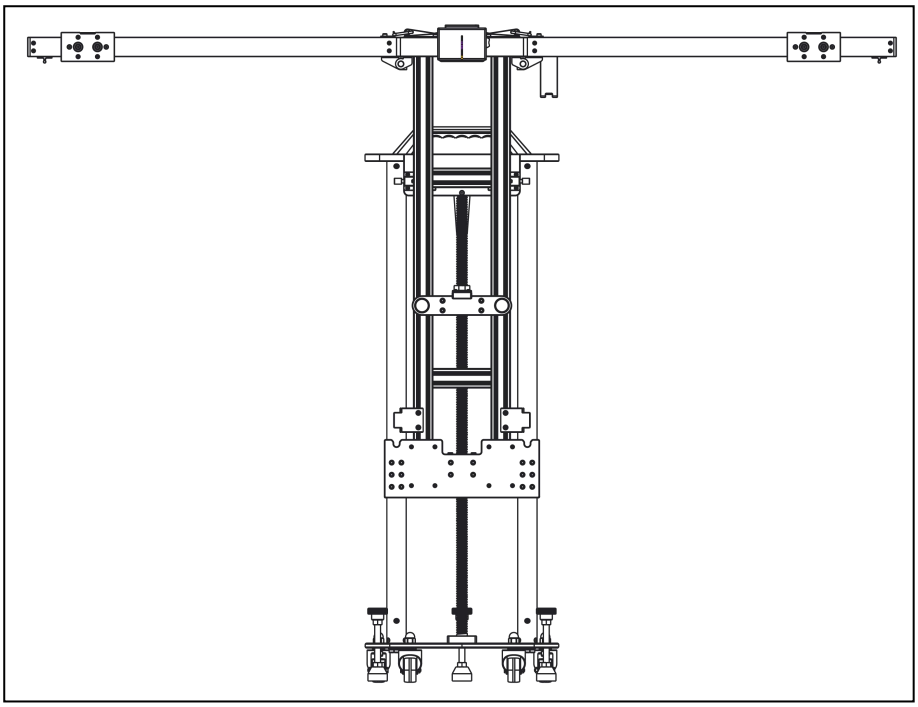

- ADAS LITE Calibration Tool - It is used to determine the locations of vehicle to be calibrated and the calibration tool, and complete the ADAS system calibration in combination with the calibration software.
- Diagnostic Tool (need to be purchased separately)-The calibration tool needs to be used together with a SmartSafe authorized or approved diagnostic tool that is compatible with ADAS functions.

1.3 Packing List

The following accessories are for reference only. For different destinations, the accessories may vary, please consult from the local dealer or check the packing list supplied with this tool together.

Please note when unloading: heavy equipment may fall and cause personal injury. Please unload the equipment with the help of others or use appropriate auxiliary tools as needed.

Accessories	Picture for Reference	Quantity
Main Frame	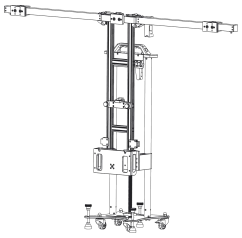	1
Central Laser *LAM09-02*	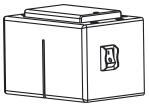	1
Laser Range Finder *(Height)*	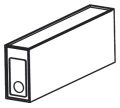	1
Positioning Bracket *LAM09-05*		1
Tape	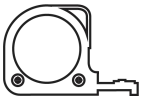	1
Centring Parallel Auxiliary Line Kit		2
		8
Cross Sticker		10
Activation Card	-	1
User Manual	-	1
Packing List	-	1

2. Get to Know ADAS LITE Calibration Tool

2.1 Main Components

The ADAS LITE calibration tool is mainly composed of the following components:

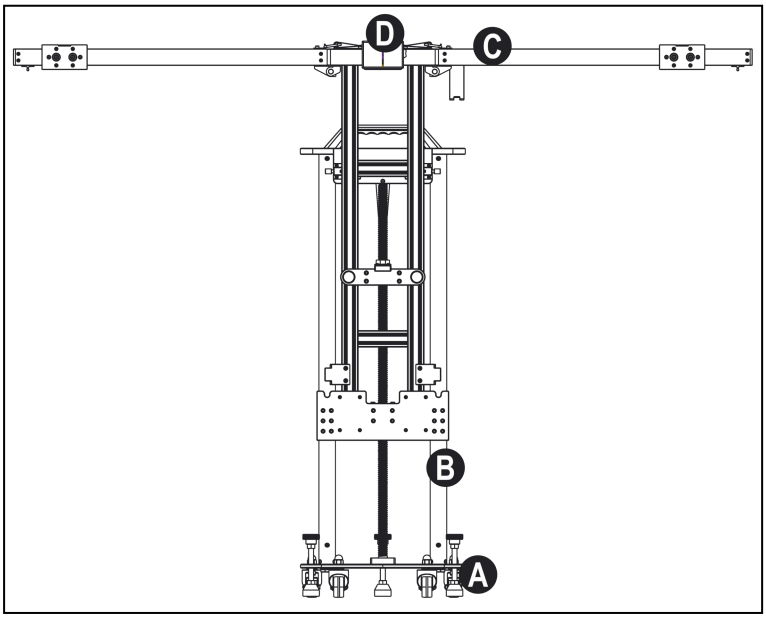

(*This drawing is not a picture of actual product, which is for illustration purposes only. Due to the continuous improvement of the product, it will be updated from time to time, please refer to the actual product.)

No.	Description
A	**Base Components** It is used to fix the beam lifter, and balance the target holder installed on the beam lifter. The base is equipped with 4 rollers, which is convenient for users to move the calibration tool.
B	**Beam Lifter Components** It is installed on the base to fix the target holder and realize the height lifting of the equipment.
C	**Target Holder Components** Used to install and hang LDW target.
D	**Central Laser** Used to assist in aligning the tool with the vehicle.

2.2 Base Components

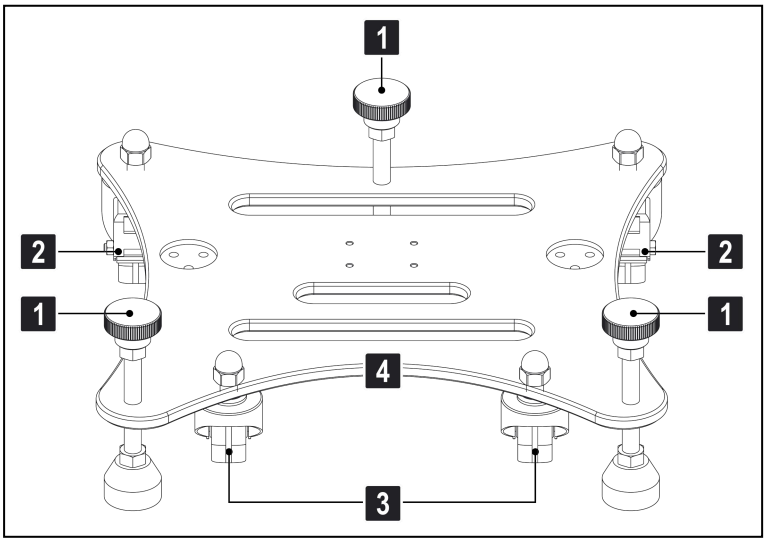

No.	Description
1	**Adjustment Knob** Used to adjust the level of the calibration tool.
2	**Brake Device** Press it down to lock the universal wheel.
3	**Universal Wheel** Used to move the calibration tool.
4	**Beam Lifter Connecting Plate** Used to mounting and fixing beam lifter.

2.3 Beam Lifter

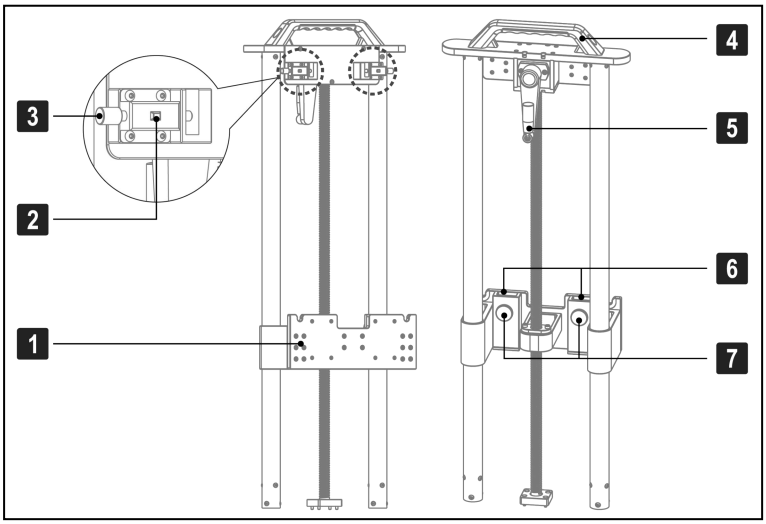

No.	Description
1	**Hanging Board** Used to hang and attach mounting plate.
2	**Unlock Button** Used to unlock the spring bolt (3).
3	**Spring Bolt** Used to lock and fix the vertical bar slider.
4	**Handle** Easy to move the calibration tool.
5	**Crank Handle** Used to adjust the height of the calibration tool, foldable.
6	**Target Holder Fixing Groove** Used to install the target holder.
7	**Fixed Knob** Used to fix the target holder.

2.4 Target Holder Components

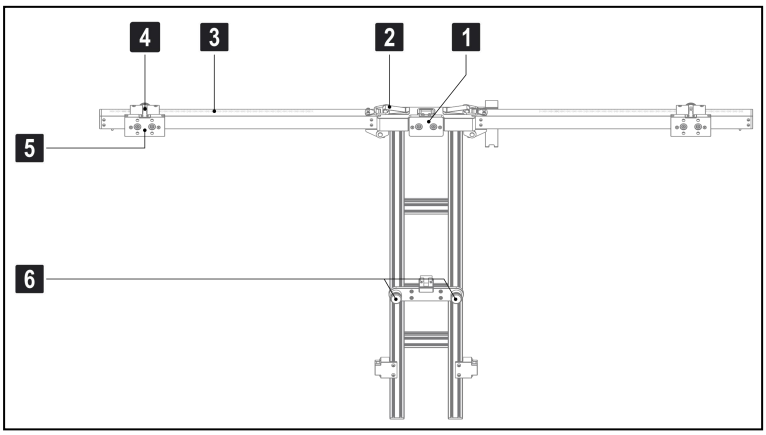

Front View

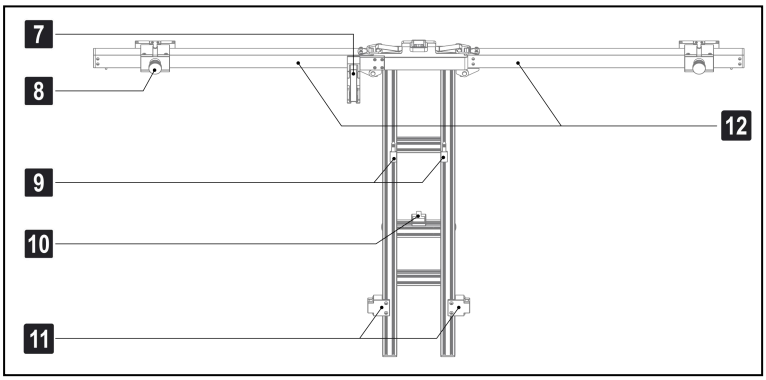

Rear View

No.	Description
1	**Center Target Fixing Block** Used to install Central Laser and small size targets. When installing a big targets, it should be pushed up to ensure a proper installation of the target.
2	**Safety Snap Lock** Used to lock the extended crossbar.
3	**Scale**
4	**Indicating Arrow**
5	**Target Fixing Block** Used to install small size targets and target extension rods.
6	**Target Positioning Base** Used to support the large-size LDW Target.
7	**Height Range Finder Kits**
8	**Lock Knob** Used to fix the target fixed block. When not locked, the target fixed block can move left and right on the slide rail.
9	**Vertical Bar Slider** Used to connect the target holder and beam lifter and ensure that the target holder remains parallel to the beam lifter when it is raised and lowered.
10	**Spirit Level**
11	**Crossbar Fixing Seat** Used to fix the folded crossbar (12).
12	**Crossbar** Used to place the target fixing block (5) and height range finder kits (7). Collapsible for easy packing and portability.

2.5 Central Laser (LAM09-02)

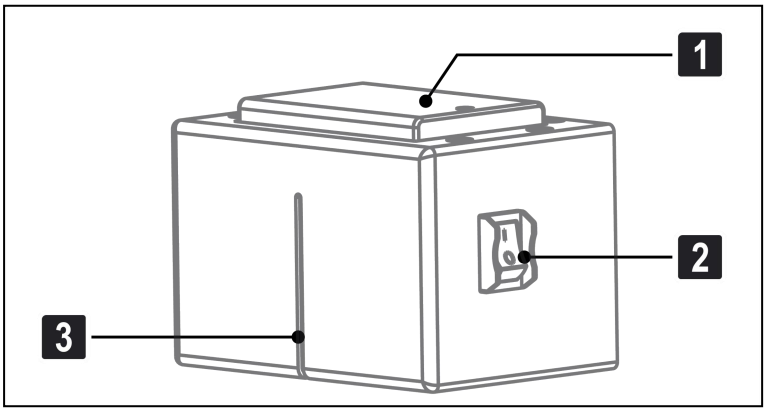

No.	Description
1	**Battery Case** Supply power to the laser, and two AA batteries are required.
2	**Switch** Used to turn on or off the laser beam of Central Laser.
3	**Laser Beam Output Port**

3. Initial Use

3.1 Install The ADAS Calibration Tool

By default, for the convenience of transportation, the left and right crossbars of the target holder are folded. Please unfold them according to the following steps.

1. Pull up the left and right crossbars to level.
2. Use the safety snap lock to lock the crossbars.

Note: Be careful not to pinch your hands when locking the crossbar with the safety snap lock.

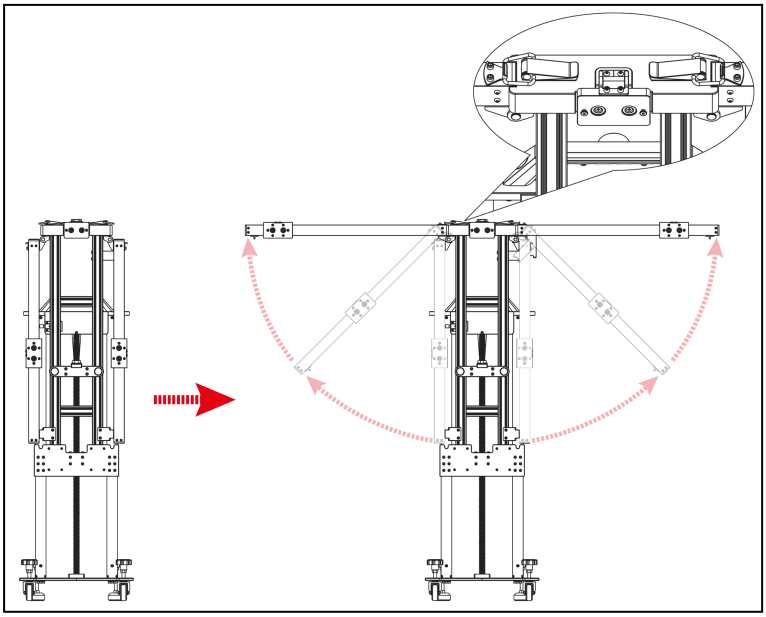

3.2 Activate ADAS Function

Before using the calibration function, the user needs to activate the ADAS function authorization on the diagnostic tool (purchased separately) with the activation card included with the machine.

The specific activation steps are as follows:

Note: For different diagnostic tool, the access to ADAS function may be different.

1. Start the diagnostic device and enter the software main interface.
2. Click the **ADAS** icon on the screen to enter the following screen:

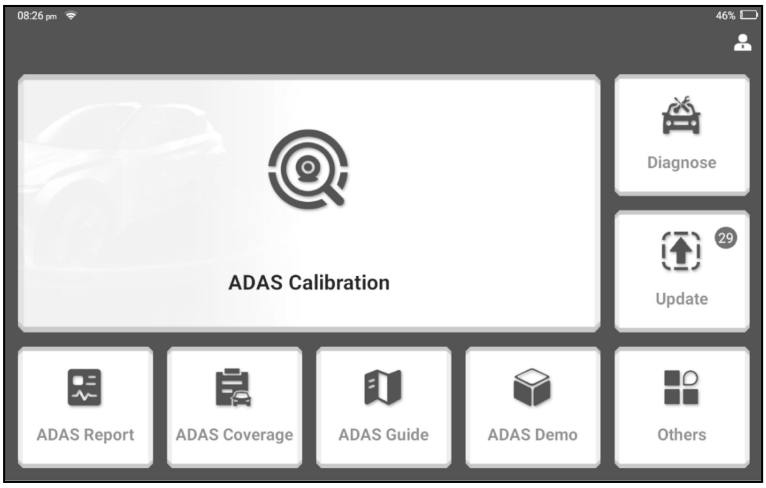

3. Tap **ADAS Calibration**, if the ADAS function is not activated, the screen will display as follows:

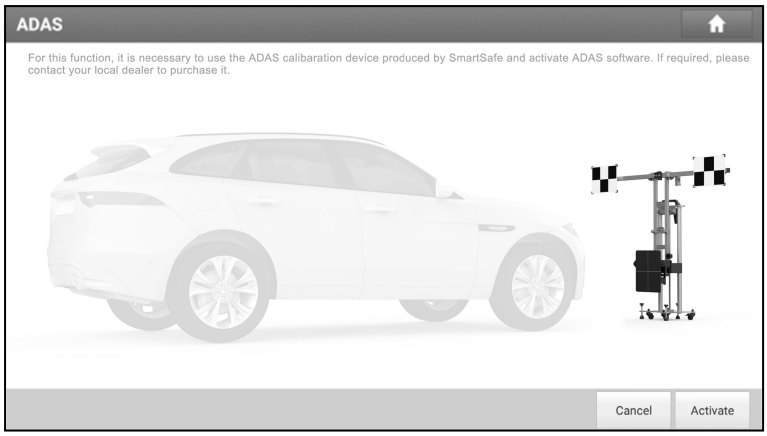

4. Tap **Activate** to enter the ADAS activation screen.

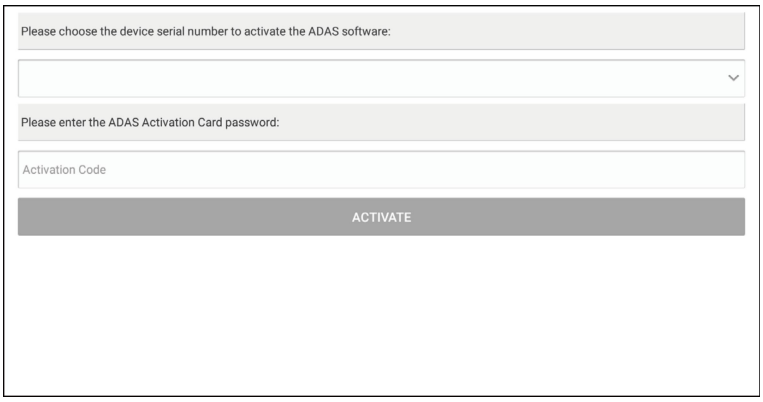

5. Select the correct device serial number, enter the 24-digit activation code (take out the ADAS activation card that comes with the tool, and scratch the coating area to display the activation code), and tap **ACTIVATE**.

6. Now the ADAS function becomes accessible and is ready for use.

4. Start Using ADAS Calibration Tool

The calibration operations must strictly follow the software prompts on the diagnostic tool. ADAS calibration can be divided into dynamic calibration and static calibration. For static calibration, it requires using the calibration tool and corresponding target to complete. During static calibration, the user is required to place the calibration tool in a fixed position in front of the vehicle according to the software prompts and adjust the device to be parallel and centered to the vehicle, use the correct calibration target, and adjust the target altitude to the one specified by the software.

4.1 Prerequisites for Using ADAS Calibration Tool

Reason for Calibration:

- Repair or replace the sensor control unit (replace ACC radar, front camera sensor).
- The deviation angle of the sensor is out of normal range (the angle of installation position is incorrect).
- Move the position of the sensor on vehicle body (sensor position changed).
- Repair or replace the parts that fix the front sensor (replace the bumper, front windshield).
- Adjust the chassis.

Before using the calibration tool to perform the calibration, please ensure the following conditions:

- The position of the vehicle with a sensor cannot be damaged.
- The fixed sensor components and brackets cannot be deformed.
- Check the air pressure of tire and correct it to the recommended value if necessary.
- Apply the parking brake and close the door.
- Make sure that the vehicle's coolant and oil should be within the recommended range, and fill up with fuel. The vehicle does not carry any items (passengers or cargo).
- Connect the VCI to the vehicle to ensure that there is no DTC in other systems of the vehicle except ADAS-related systems.
- During calibration, the operator should not support on the vehicle.

4.1.1 Workstation size

4.1.1.1 For Front Camera

The workplace requirements when calibrating the front camera are as follows:

Distance A = about 2 meters (the width of the calibration tool)

Distance B = about 1 meter (from the target holder to the wall)

Distance C = at least 0.5 meters (from the edge of the calibration tool to other obstacles)

Distance D = varies from vehicle to vehicle, about 1.5 meters is strongly recommended (from the calibration tool to the vehicle)

Distance E = reserved for about 1 meters (from the vehicle to other obstacles)

Distance F = at least 0.5 meters (a lane for technician to walk through)

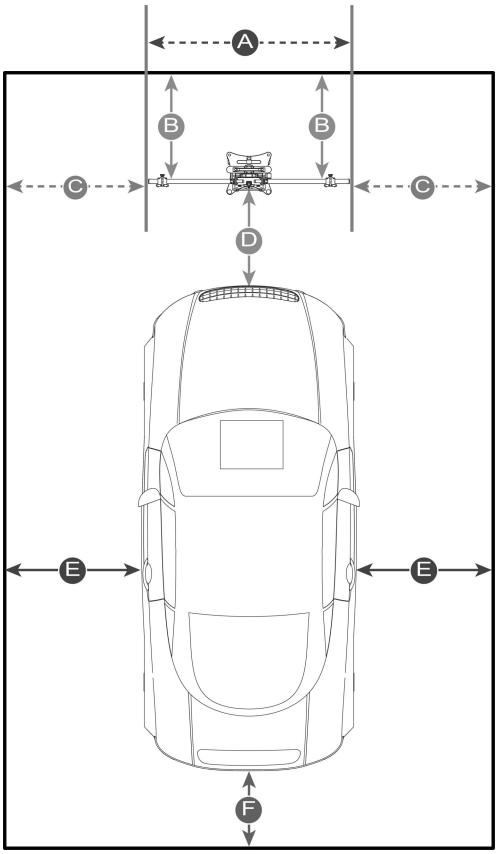

4.1.1.2 For Rear & AVM Cameras

For calibrating the rear & AVM camera, the whole workstation size depends on the vehicle size and the calibration reference pattern. The following illustration describes the maximum workstation size for reference only.

For American vehicles:

Distance A = about 7.3 meters (the width of the whole workstation)

Distance B = about 12 meters (the length of the whole workstation)

Distance C = at least 0.5 meters (a lane for technician to walk through)

Distance D = about 1.7 meters (the width of the calibration reference pattern. It varies from vehicle to vehicle)

Distance E = about 2.9 meters (the width of the vehicle, varies from vehicle to vehicle)

For European vehicles:

Distance A = about 4.5 meters (the width of the whole workstation)

Distance B = about 7 meters (the length of the whole workstation)

Distance C = at least 0.5 meters (a lane for technician to walk through)

Distance D = about 0.8 meters (the width of the calibration reference pattern. It varies from vehicle to vehicle)

Distance E = about 1.9 meters (the width of the vehicle. It varies from vehicle to vehicle)

For Asian vehicles:

Distance A = about 6.1 meters (the width of the whole workstation)

Distance B = about 9.5 meters (the length of the whole workstation)

Distance C = at least 0.5 meters (a lane for technician to walk through)

Distance D = about 1.6 meters (the width of the calibration reference pattern. It varies from vehicle to vehicle)

Distance E = about 1.9 meters (the width of the vehicle. It varies from vehicle to vehicle)

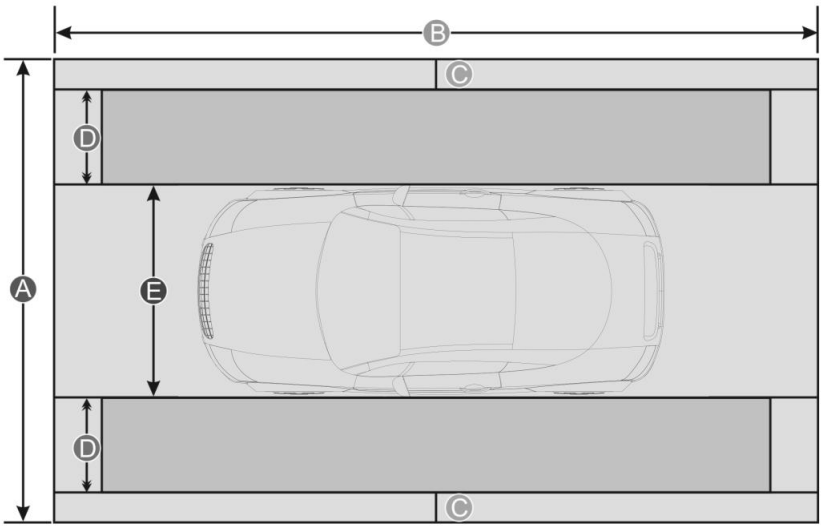

4.1.2 Workstation Ground

Make sure the vehicle is parked with all wheels on an even floor surface.

Correct:

✓	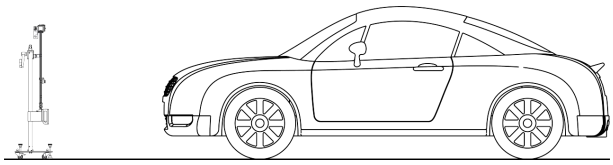

Wrong:

✗	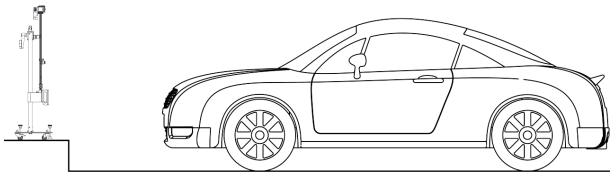
✗	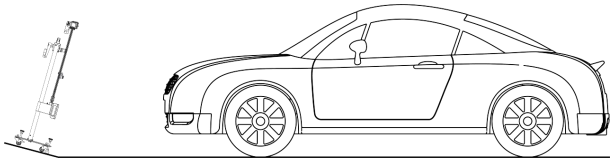
✗	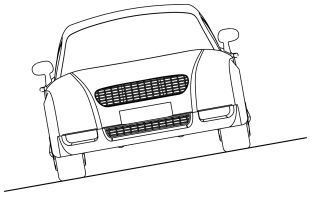

4.1.3 Workstation lighting

- ✓ The lighting system around the calibration work site should be a non-frequency flash source, including but not limited to: LED light source, industrial lighting that meets international standards, and reverse phase dual light sources.
- ✓ There should be no direct light source in the view range of camera, otherwise the camera will reduce the exposure and darken the captured calibration target, which will adversely affect the calibration.
- ✓ The light source is required to ensure that there are no reflection points on the calibration target.
- ✓ The light source is required to ensure that the illumination of the calibration work site is evenly distributed.
- ✓ Do not change the light brightness and ensure that there are no other changing light sources around the work site, such as a driving vehicle with lights on.

4.2 Calibrating Camera-based ADAS

Before calibration, you need to connect the diagnostic device and the vehicle, start the APP, and then click "ADAS" to automatically scan to obtain vehicle information and enter the ADAS menu, or manually select the vehicle software and the system that needs to be calibrated.

4.2.1 Calibrating the Front Camera

When using ADAS LITE to perform the calibration of vehicle front camera, the following steps are generally required:

Step 1. Determining vehicle alignment reference point.

Step 2. Determining the placement distance of the calibration tool.

Step 3. Adjust the tool to make it level.

Step 4. Select and install the corresponding target based on vehicle model.

Step 5. Adjust the height of calibration target.

Step 6. Perform the calibration function.

Note: The placement position of ADAS LITE calibration tool varies with vehicle models. Please strictly refer to the software prompts.

Take measuring the distance from the target to the center of the front hub as an example to introduce the operation steps in detail:

[Step 1] Determining vehicle alignment reference point

1. Use suction cups to mark points D1 and D2 on the upper left and upper right corners of the vehicle's front windshield respectively, and use the centring parallel auxiliary line to locate the symmetrical points at both ends.

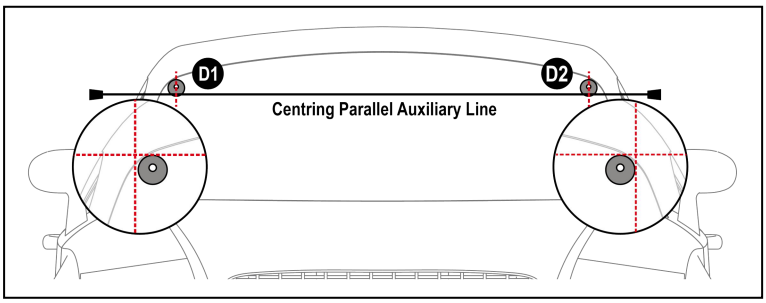

2. Take down the centring parallel auxiliary line, fold it in half with the symmetrical points at both ends as the endpoints, and move the centering reference point to the center of the auxiliary line.

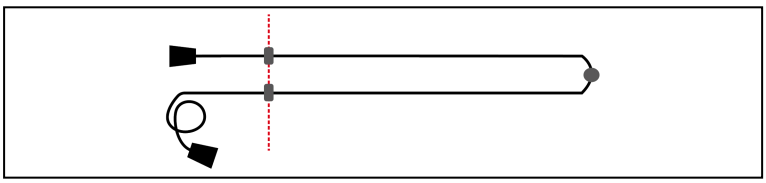

3. Re-position the symmetrical points at both ends of the centring parallel auxiliary line at point D1 and point D2 respectively.

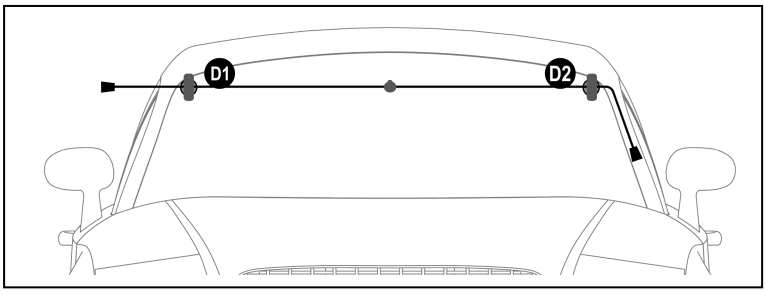

Note: When positioning the centring parallel auxiliary line, the wire harness must be kept in a tightened state.

[Step 2] Determining the placement distance of the calibration tool

1. Place the positioning bracket LAM09-05 at the center of the vehicle front hub.

2. Measure the distance from the center of the front hub to the target as L (L=the distance prompted by the software), place a cross sticker to mark the point C.

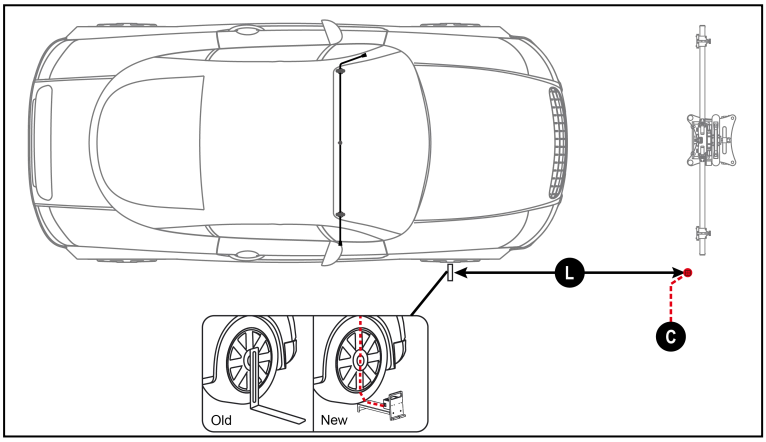

3. Install the central laser LAM09-02 and turn on it.

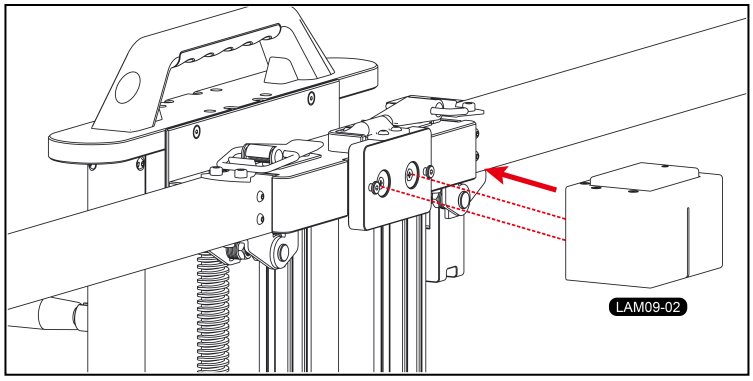

4. Move the calibration tool so that the transverse laser beam of the central laser LAM09-02 passes through point C, and the vertical laser beam passes through the center of the vehicle logo and the centering reference point.

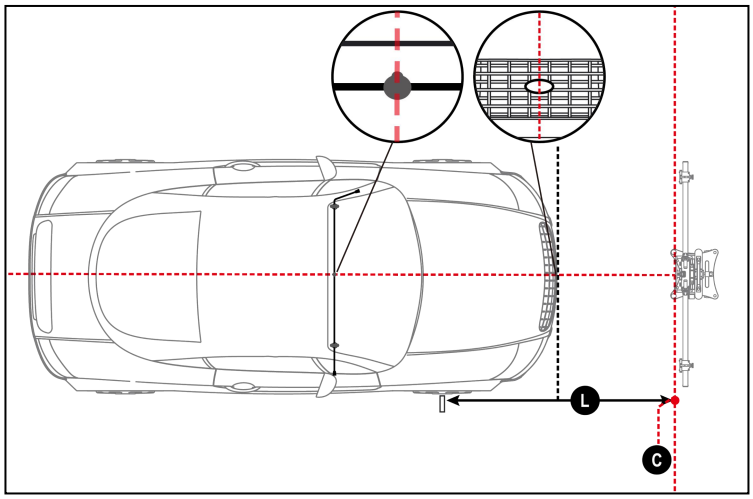

[Step 3] Adjust the tool to make it level

1. Observe the spirit level ②, rotate the base adjustment knob ① to adjust the tool to level.

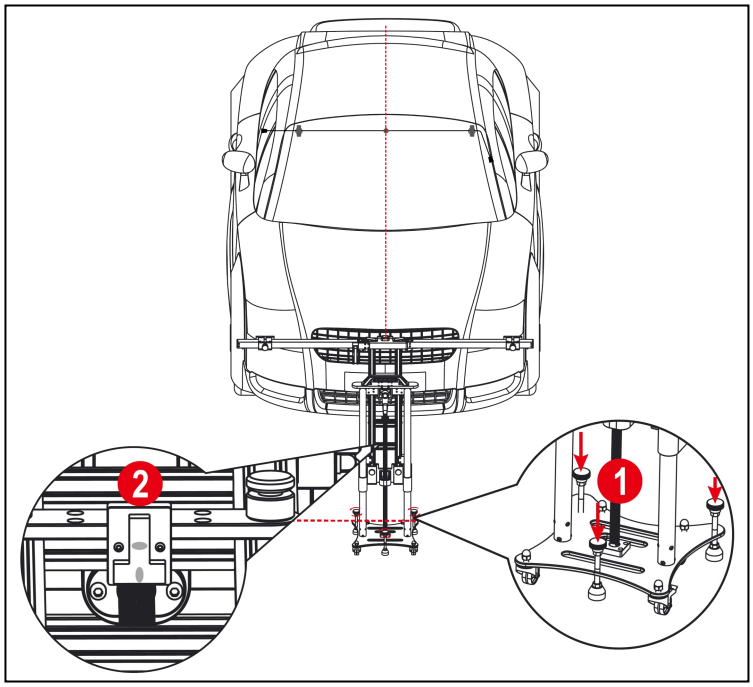

2. Confirm again that the vertical laser beam passes through the center of the vehicle logo and the centering reference point, and the distance L between the calibration tool and the center of the vehicle front hub remains unchanged.

3. Turn off the central laser LAM09-02 and take down it.

[Step 4] Select and install the corresponding target based on vehicle model

1. Select the corresponding target panel according to the vehicle model to be calibrated.

2. Take large size targets for front camera (such as LAM01-02) as an example. The installation method is as follows:

1) Turn up the center magnetic plate ① of the target holder to stand up, and move the left and right target fixing blocks ② to both sides.

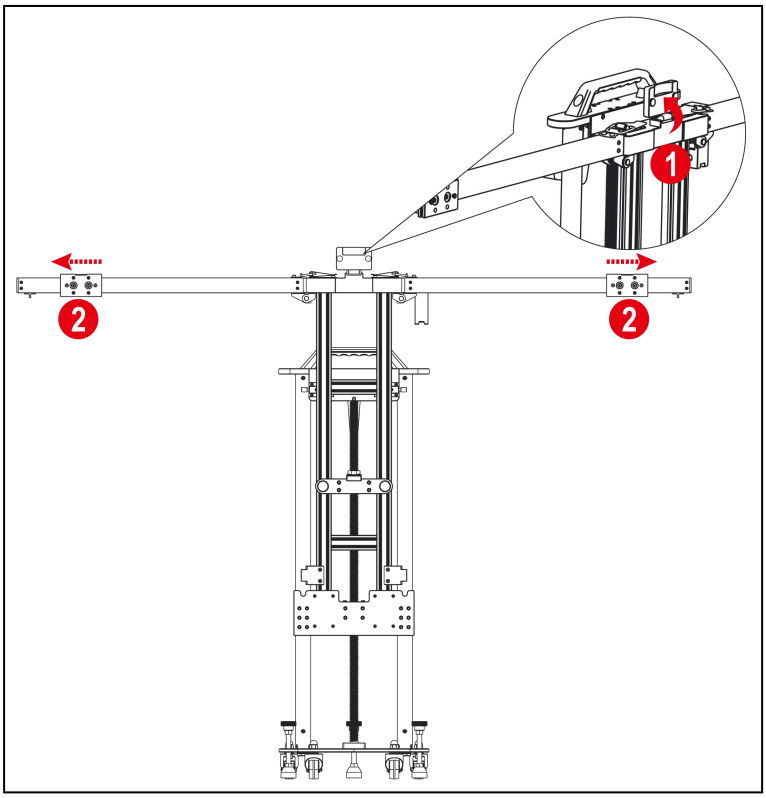

2) Find the mounting hole ③ of the large size target, which is generally located in the middle of target bottom.

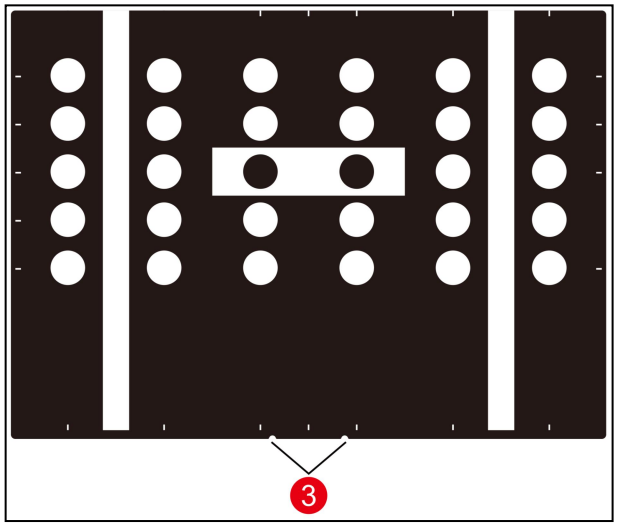

3) Align the target mounting hole with the target positioning base ④ to fix the target, and move the target fixing block ② until both sides of the target are firmly clamped.

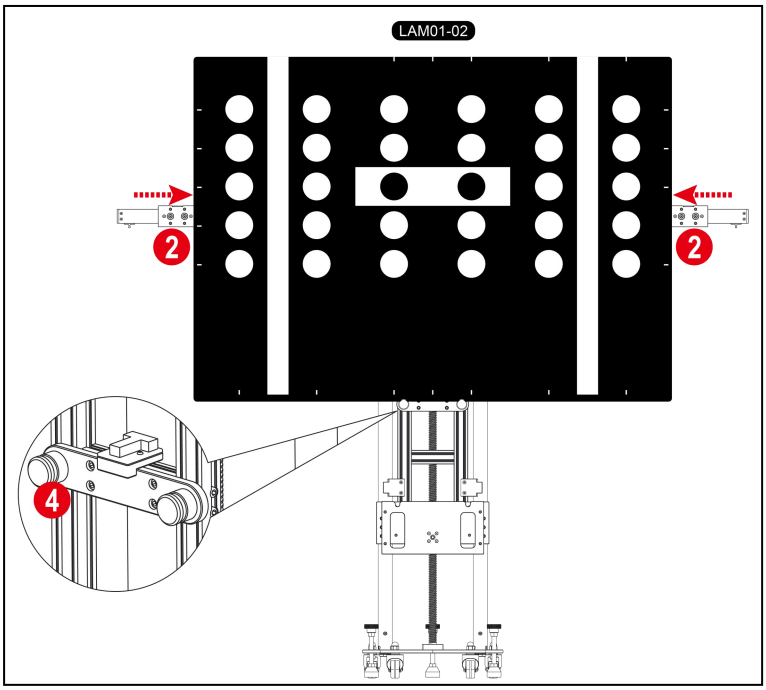

Note: Please refer to the section end [Small Size Target Installation Method] for the installation steps of the small size target for front camera.

[Step 5] Adjust the height of calibration target

Turn on the height range finder ①, adjust the height of the calibration tool so that the value of height range finder ① is H (H = the height prompted by software).

Note: Please make sure that the laser illumination area is free of water stains and other reflective objects that affect the measurement results.

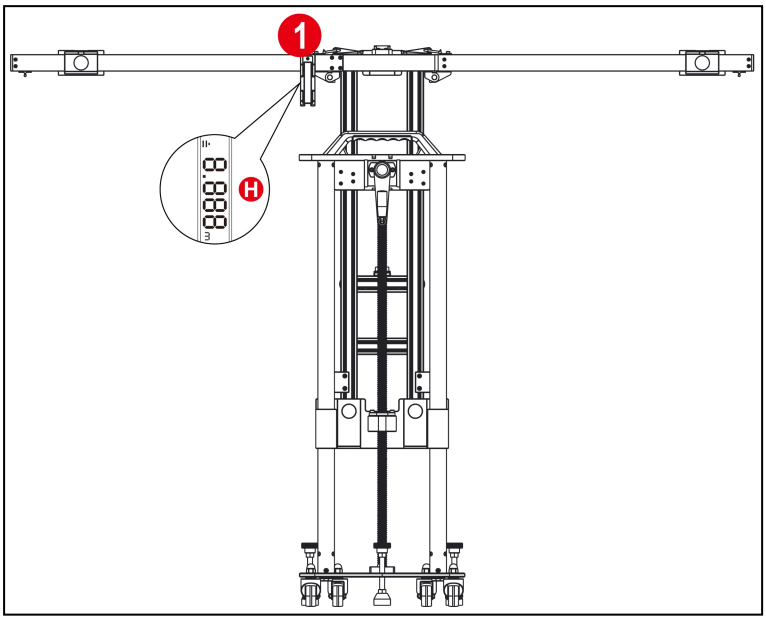

[Step 6] Perform the calibration function

Perform the calibration function according to the software prompts, and save the ADAS report after the calibration is completed. It is recommended to re-scan the system to confirm that the fault has been resolved.

[Small Size Target Installation Method]

If you are using small size targets, please install it according to the following methods: align the holes of the fixing base on the target back with the nails on the target fixing block, hang the target on the nail, and pull it downward to make it installed in place and will not shake.

There are 3 conditions for the installation and use of small size targets shown as below:

1. A single target, installed on the center target fixing block (such as: LAM01-01)

Install the target on the center target fixing block, and the target fixing block shall not be turned up.

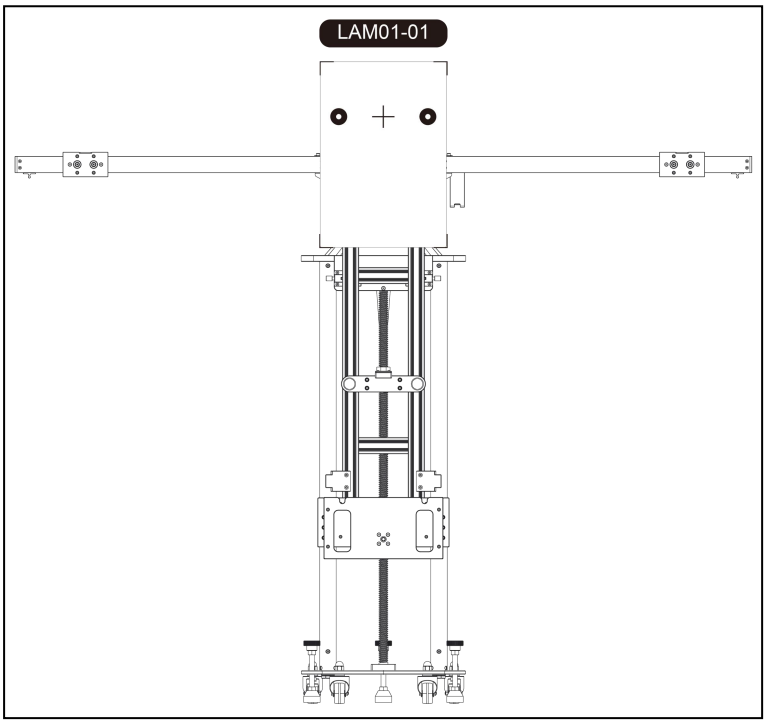

2. A single target, installed on multiple locations (such as: LAM01-06-2)

1) Move the left and right fixing blocks ① of the target to the position W on the scale, W=the scale prompted by software.

2) Install the target on the center target fixing block and perform calibration.

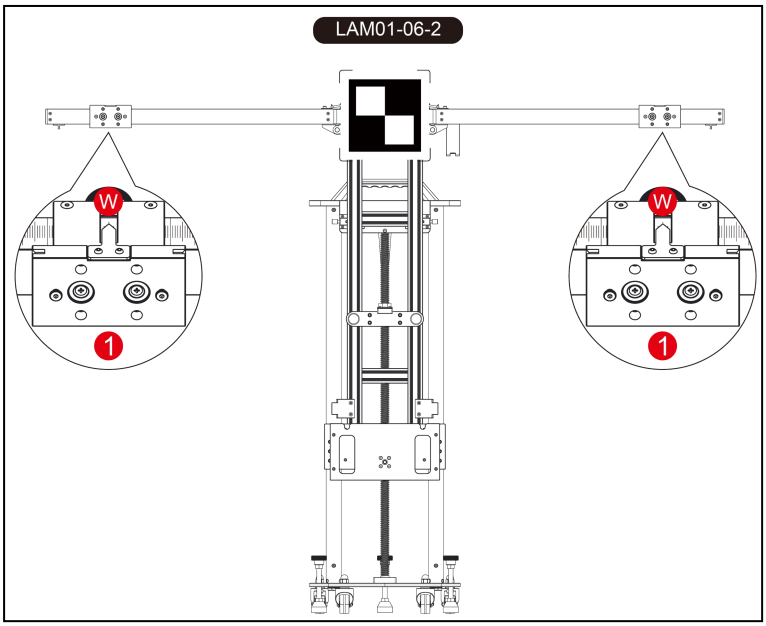

3) After the calibration is passed, remove the target and install it on the left target fixing block and perform calibration.

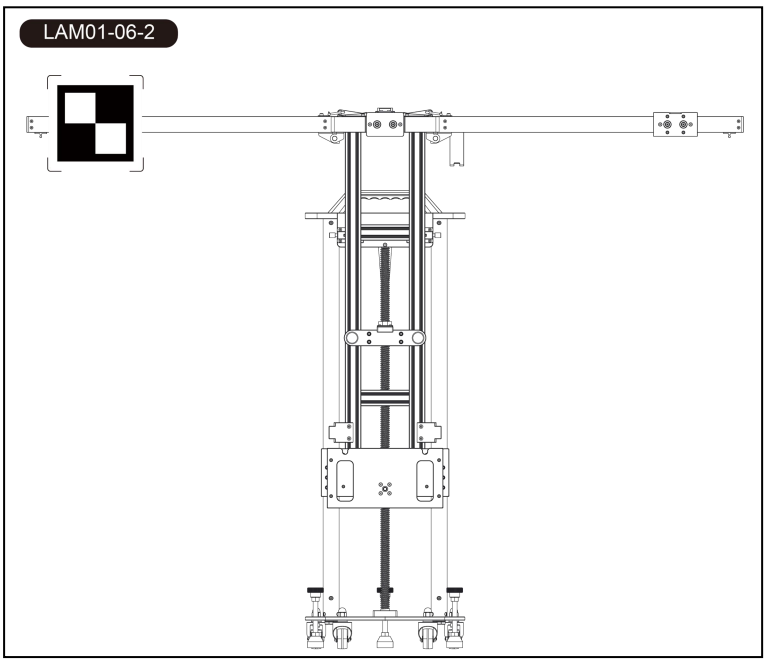

4) After the calibration is passed, remove the target and install it on the right target fixing block and perform calibration.

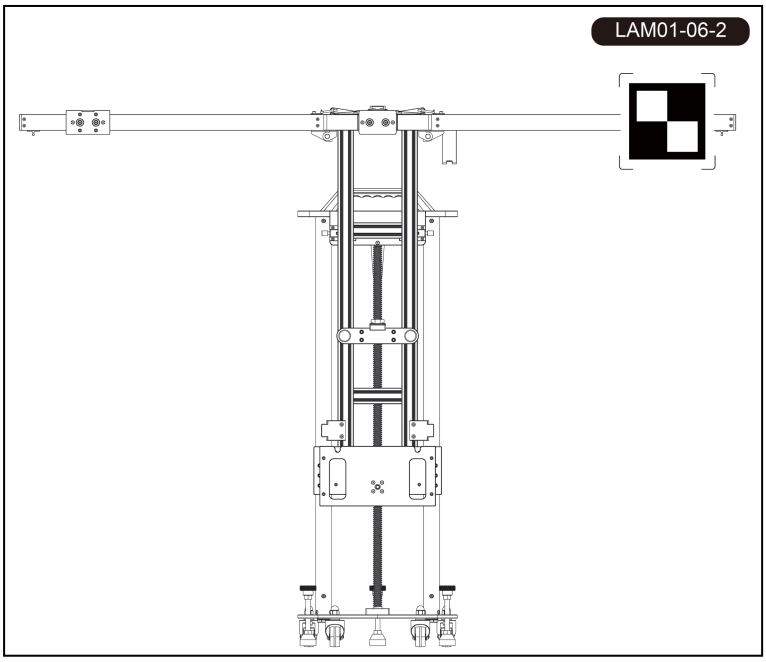

3. Multiple targets installed in multiple positions (e.g.: LAM01-04-L / LAM01-04-R)

1) Move the fixing blocks ① of left and right targets to the position W on the scale, W=the scale prompted by software.

2) Install the left and right targets on the target fixing blocks on the left and right sides respectively.

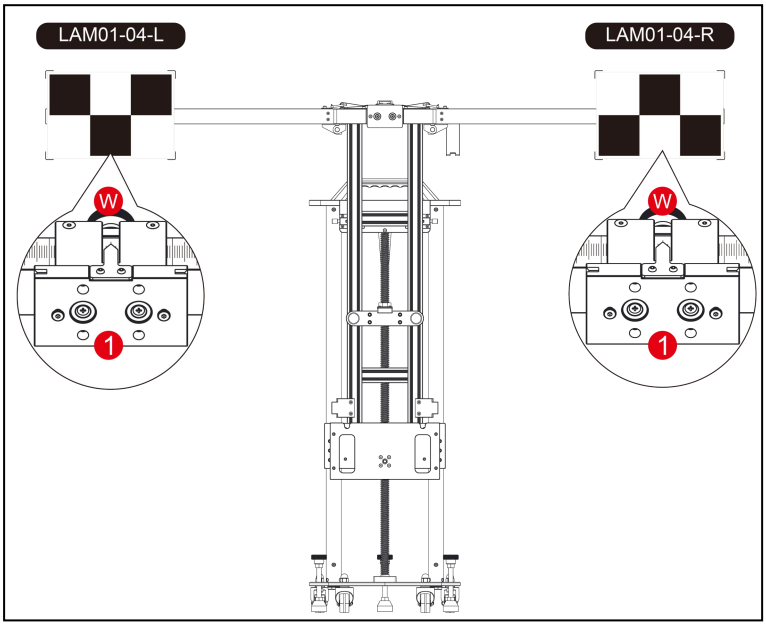

Note: When the lateral width or minimum height of the calibration main frame cannot meet the vehicle calibration requirements, a target extension rod is needed to extend the support.

1) Use the target extension rod LAM09-08 when the minimum altitude cannot be met. Install it on the target fixing block (the same method as the small size target), and then install the target on the extension rod.

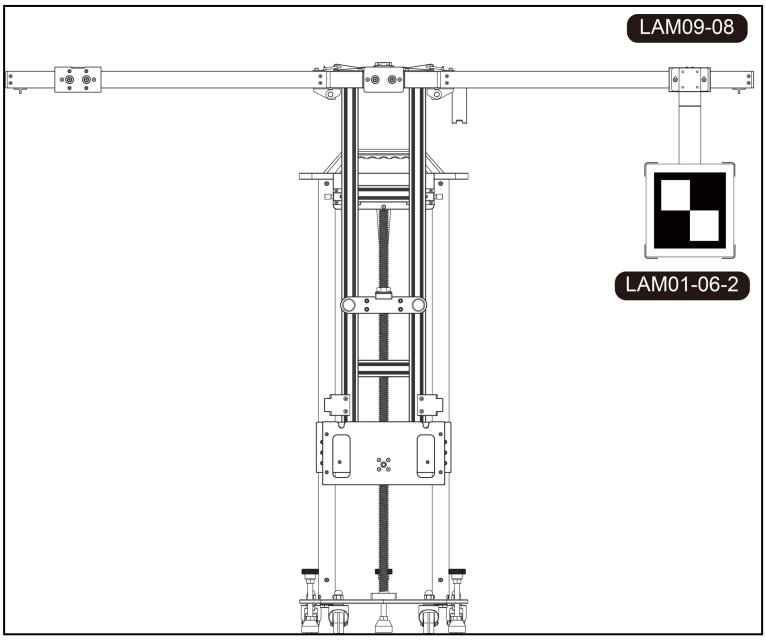

2) When the lateral width is not met, use the target extension rod LAM09-09. Install it on the target fixing block, then use the locking device to make that the target extension rod is installed firmly, and then install the target on the extension rod.

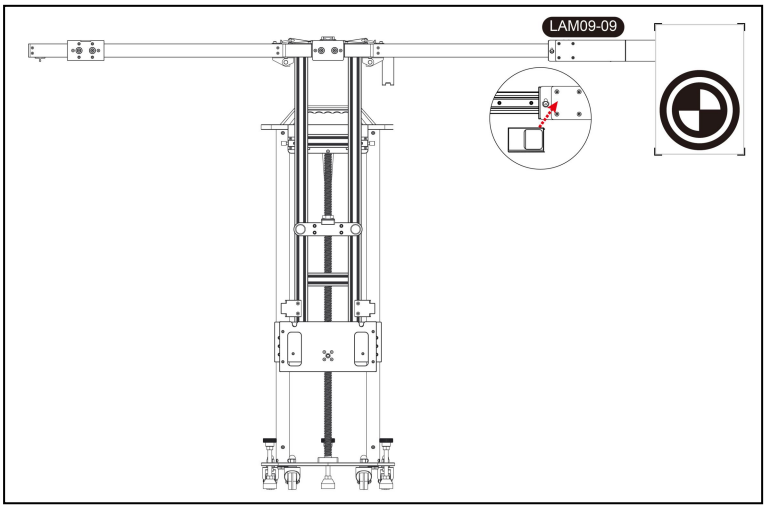

4.2.2 Calibrating the Rear Camera & AVM Camera

When calibrating the rear camera or AVM camera, there is no need to use the X-431 ADAS Mobile Plus calibration tool, just select the corresponding rear view or surround view calibration targets of vehicle model, and place the targets on the corresponding position according to the software prompts.

4.3 Calibrating the Radar Sensor

The ADAS LITE calibration tool provides a variety of radar sensor calibration targets (optional), which are used for the calibration of ADAS radar sensor. When using ADAS LITE to perform calibration for vehicle radar sensors, generally you need to follow the steps below (take ACC radar as an example):

Step 1. Determining vehicle alignment reference point

Step 2. Determining the placement distance of the calibration tool

Step 3. Install the ACC radar reflector and adjust the calibration tool level position

Step 4. Adjust the height of calibration target

Step 5. Perform the calibration function

Take calibrating the radar at the center of the vehicle as an example to introduce the operation steps in detail:

[Step 1] Determining vehicle alignment reference point

1. Use suction cups to mark points D1 and D2 on the upper left and upper right corners of the vehicle's front windshield respectively, and use the centring parallel auxiliary line to locate the symmetrical points at both ends.

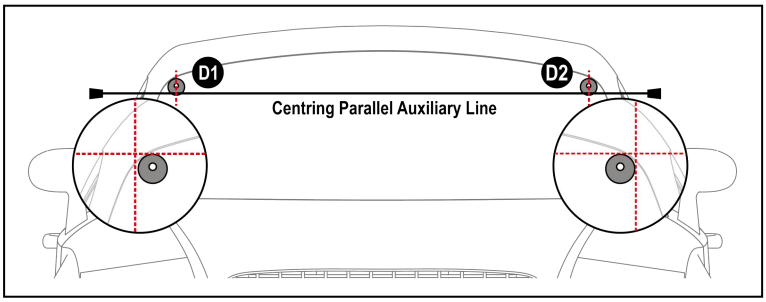

2. Take down the centring parallel auxiliary line, fold it in half with the symmetrical points at both ends as the endpoints, and move the centering reference point to the center of the auxiliary line.

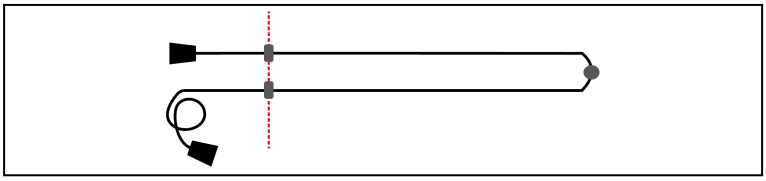

3. Re-position the symmetrical points at both ends of the centring parallel auxiliary line at point D1 and point D2 respectively.

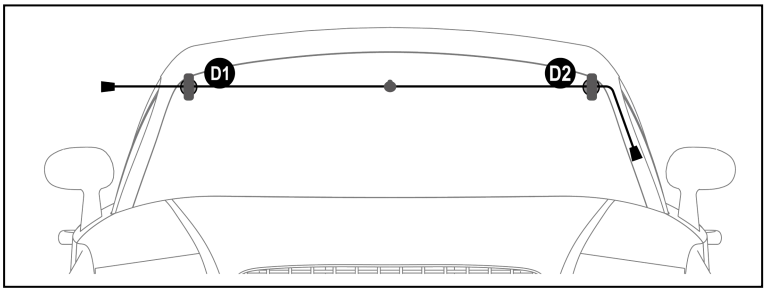

Note: When positioning the centring parallel auxiliary line, the wire harness must be kept in a tightened state.

[Step 2] Determining the placement distance of the calibration tool

1. Install the central laser LAM09-02 and turn on it.

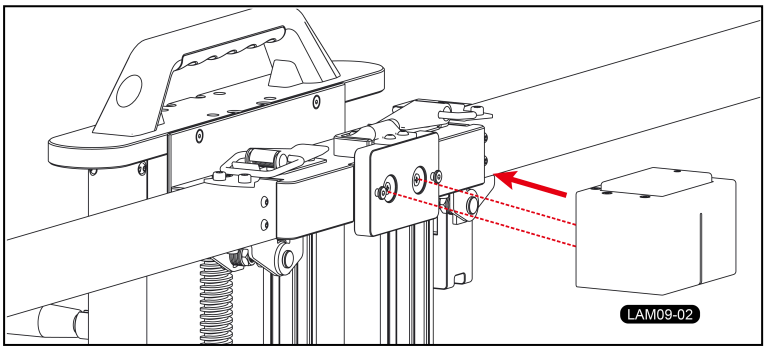

2. Move the calibration tool to the front of the vehicle, make the vertical laser beam of the central laser LAM09-02 pass through the center of the vehicle logo and the centering reference point respectively, place a cross sticker on the vertical laser beam, mark point C, and make the distance from the front radar of the vehicle to point C is L (L=the distance prompted by the software).

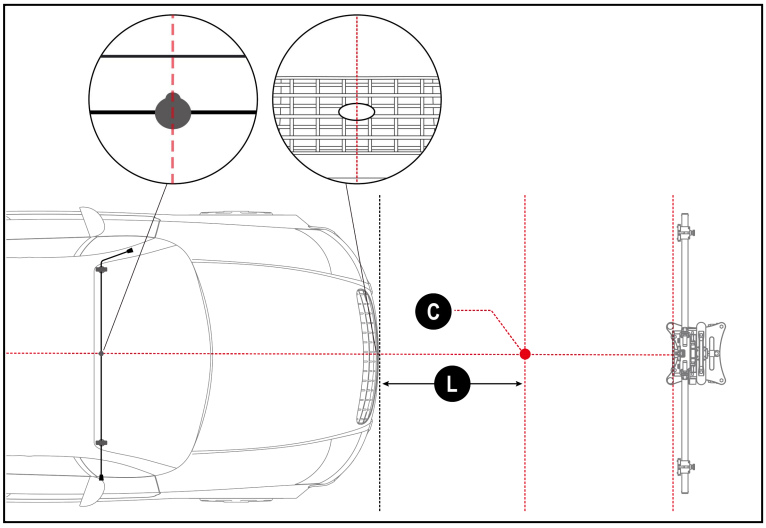

3. Move the calibration tool so that the intersection point of the vertical laser beam and the transversal laser beam of the central laser LAM09-02 coincides with point C, and the vertical laser beam passes through the center of the vehicle logo and the centering reference point of the vehicle.

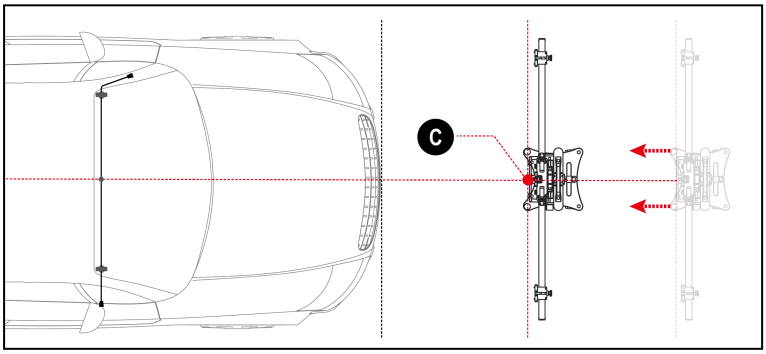

[Step 3] Install the ACC radar reflector and adjust the calibration tool level position

1. Place the mounting plate LAL09-10 and install the ACC radar reflector LAM05-02.
2. Adjust the position of the ACC radar reflector LAM05-02 to position 2.

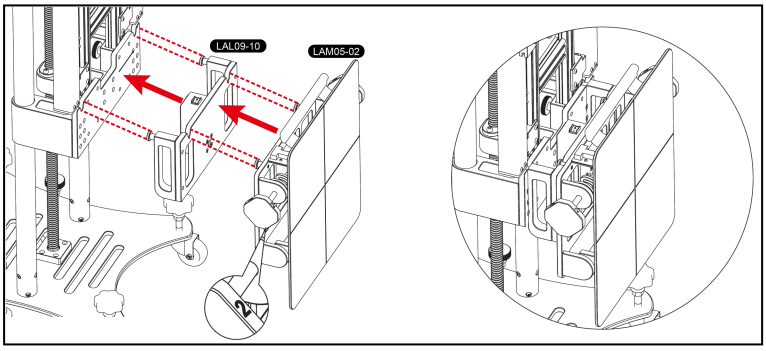

3. Observe the spirit level ② on the ACC radar reflector , rotate the base adjustment knob ① as needed to adjust the tool to level.

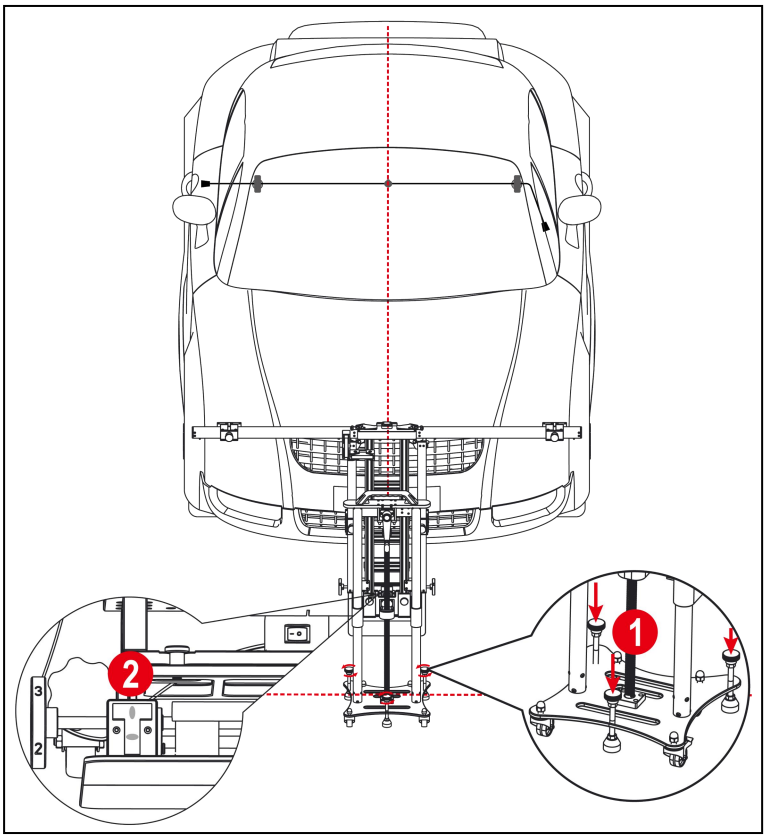

4. Confirm again that the vertical laser beam passes through the center of the vehicle logo and the centering reference point respectively, and the distance L between the calibration tool and the front radar of the vehicle remains unchanged.

[Step 4] Adjust the height of calibration target

Turn on the height range finder ①, adjust the height of the calibration tool so that the value of height range finder ① is H (H = the height prompted by software).

1. Turn on the laser beam of mounting plate LAL09-10.
2. Adjust the height of the calibration tool so that the laser spot is irradiated at the center of the radar sensor.

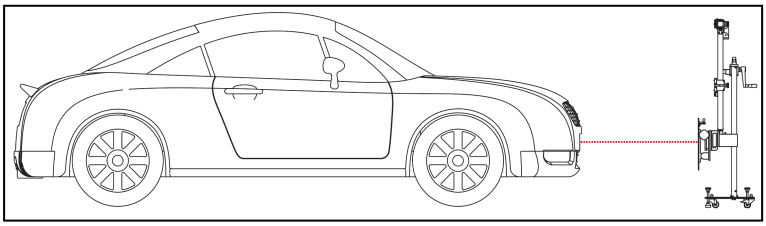

Note: If the radar sensor has a mirror, it is necessary to point the laser at the position of the small mirror of the radar sensor, and ensure that the laser ray can be reflected back to the center of the ACC reflector.

[Step 5] Perform the calibration function.

Perform radar calibration function according to the software prompts. Save the ADAS report after the calibration completed. It is recommended to scan the system again after the calibration completed to confirm that the fault has been resolved.

5. Service and Maintenance

- Be careful when operating each accessory of the ADAS calibration tool.
- Use acid- and resin-free grease or oil to wipe the movable components regularly.
- Clean the ADAS calibration tool regularly with a mild detergent.
- If you use a standard household cleaner, spray it on a damp towel.
- If any component is damaged, please use the original replacement component to replace it immediately.

Warranty

THIS WARRANTY IS EXPRESSLY LIMITED TO PERSONS WHO PURCHASE SMARTSAFE PRODUCTS FOR PURPOSES OF RESALE OR USE IN THE ORDINARY COURSE OF THE BUYER'S BUSINESS.

SMARTSAFE electronic product is warranted against defects in materials and workmanship for one year from date of delivery to the user.

This warranty does not cover any part that has been abused, altered, used for a purpose other than for which it was intended, or used in a manner inconsistent with instructions regarding use. The exclusive remedy for any automotive meter found to be defective is repair or replacement, and SMARTSAFE shall not be liable for any consequential or incidental damages.

Final determination of defects shall be made by SMARTSAFE in accordance with procedures established by SMARTSAFE. No agent, employee, or representative of SMARTSAFE has any authority to bind SMARTSAFE to any affirmation, representation, or warranty concerning SMARTSAFE automotive meters, except as stated herein.

Disclaimer

The above warranty is in lieu of any other warranty, expressed or implied, including any warranty of merchantability or fitness for a particular purpose.

Purchase Order

Replaceable and optional parts can be ordered directly from your SMARTSAFE authorized tool supplier. Your order should include the following information:

Order quantity

Part number

Part name

Customer Service Center

For any problem met during the operation, please call +86-0755-89589810.

If the device needs to be repaired, please send it back to SmartSafe, and attach the Warranty Card, Product Qualification Certificate, Purchase Invoice and problem description. SmartSafe will maintain and repair the device for free when it is within warranty period. If it is out of warranty, SmartSafe will charge the repair cost and return freight.

SmartSafe address:

3310, Building 11, Tian'an Cloud Park, Bantian Street, Longgang District, Shenzhen,Guangdong, China

SmartSafe Website: www.newsmartsafe.com

Statement:

SMARTSAFE reserves the rights to make any change to product designs and specifications without notice. The actual object may differ a little from the descriptions in the manual in physical appearance, color and configuration. We have tried our best to make the descriptions and illustrations in the manual as accurate as possible, and defects are inevitable, if you have any question, please contact local dealer or after-sale service center of SMARTSAFE, SMARTSAFE does not bear any responsibility arising from misunderstandings.