All rights reserved! Any company or individual person shall not copy or backup this user manual in any format (electronic, mechanical, photocopying, recording or other formats) without written permission from Shenzhen SmartSafe Tech Co., Ltd (hereinafter referred to as "SmartSafe"). The manual is for the use of the products manufactured by SmartSafe, which shall not assume any responsibility for the consequences arising from the use of it to guide the operations of other equipment.

SmartSafe and its branches will not bear any liability for the fees and expenses incurred by equipment damage or loss due to accidents caused by users or third parties, misuses and abuses, unauthorized modifications and repairs, or operations and services not following SmartSafe's instructions.

SmartSafe assumes no responsibility for device damages or problems resulted from the usage of other parts or consumables, rather than original products of SmartSafe or products approved by the company.

Official statement: the mentioning of the names of other products in this manual is to illustrate how to use the device, with the ownership of the registered trademarks belonging to the owners.

The device is intended for the use of professional technicians or maintenance and repair personnel.

Registered Trademark

SmartSafe has registered its trademark in China and several other countries, and the logo is SmartSafe. Other trademarks, service marks, dot names, icons, company names of SmartSafe mentioned in the user manual all belong to SmartSafe and its subsidiaries. In those countries where trademarks, service marks, dot names, icons, company names of SmartSafe have not been registered yet, SmartSafe declaims the right for its unregistered trademarks, service marks, dot names, icons, and company names. Trademarks of other products and company names mentioned in this manual are still owned by the original registered companies. Without written agreement from the owner, no person is allowed to use the trademarks, service marks, domain names, icons and company names of SmartSafe or of other mentioned companies. You can visit www.newsmartsafe.com, or write to Customer Service Center of Shenzhen SmartSafe Tech Co., Ltd at 3310, Building 11, Tianan Cloud Park, Bantian Street, Longgang District, Shenzhen, Guangdong, P. R. China, to get contact with SmartSafe for the written agreement on the usage of the user manual.

Special note: The manual introduces in detail the structure, functions, operation method and related accessories of injector cleaner & tester, and briefly explains the precautions in the process of using, maintenance and handling of abnormalities. SmartSafe reserves the right to change the design and specifications of the product. The actual configuration shall be subject to the packing list.

ATTENTION!

Important Safety Instructions:

- Please read the manual carefully before using the instrument for proper operation!
- Be careful when touching the device or hot parts of the engine.
- If the power cord is broken, please do not turn the device on and use it. If the device is dropped or damaged, please use it after being inspected by a professional.
- Please do not hang the power cord on the edge of the table, chair or counter. Do not touch hot parts or rotating fan blades.
- If it is necessary to extend the power cable, the level of the power cord should be higher than or equal to that of the original power line. Overheat may occur if a power cable of inferior level is used.
- Do not connect the plug of power cord when not using the device. Do not remove the plug by pulling the power line. It should be unplugged by hand.
- The device should be cooled completely before storage and the line should be wound up.
- The cleaning agent for the device is a flammable and weakly volatile liquid. Smoking and lighting fires are strictly prohibited during the cleaning process.
- The instrument should be placed in a room that is not exposed to direct sunlight and is well ventilated, and signs “Smoking and lighting fires strictly forbidden” and “Danger warning of inflammables” should be posted.
- The operator’s hair, clothes, fingers and other parts of the body should be kept away from the operating parts of the equipment.
- To prevent electric shocks, do you touch the operating equipment in wet areas or operate it in the rain.
- Please operate the device as described in the manual. Use accessories recommended by the manufacturer.
- It is strictly forbidden to open the ultrasonic system under the circumstances that ultrasonic cleaning agent has not been added into the ultrasonic cleaning pool. Otherwise, the ultrasonic equipment may be damaged easily.
- The housing of the device must be reliable and grounded.
- Automobile exhaust contains a variety of toxic and harmful gases (such as carbon monoxide, hydrocarbon, nitrogen oxide and etc.). During the test, the exhaust should be directed outdoors and the room should be well ventilated.
- The temperature of the exhaust pipe and water tank of the automobile’s engine is high. Do not touch them to prevent burns.
- Please pull up the handbrake of the vehicle to be cleaned, shift the transmission to neutral position and block the front wheel before free disassembly cleaning.
- Wear safety glasses when operating. Daily wear glasses are not safety glasses.
- When disconnecting a pressurized fuel pipe union, please cover the union with a towel to avoid getting hurt by fuel gushing out and causing fires.
- Test solution is used by the main unit of the device uses, and ultrasonic cleaning agent is used for ultrasonic cleaning.

ⓘ**: Indicates where attention should be paid when operating the device.**

⚠: **Indicates the possibility of product damage and personnel injury during operation.**

Content

I. Introduction to Injector Cleaner & Tester 1
1.1 Brief Introduction 1
1.2 Functions and Features 1
1.3 Working Environment and Specifications 2
II. Structure of Injector Cleaner & Tester 2
2.1 Structure 2
2.2 Control Panel 3
III. Installation and Connection 3
3.1 Installation 3
3.2 Connection 3
IV. Operation Procedures for Cleaning and Testing of Injectors 3
4.1 Preparations 3
4.2 Cleaning and Testing Sequences 4
4.3 Cleanup after Operation 4
V. Operation Processes 5
5.1 Operation Mode Selection 5
5.2 System Setting 5
5.3 Resistance Test 7
5.4 Ultrasonic Cleaning 7
5.5 Leakage Test 8
5.6 Uniformity/Spray 9
5.7 Injection Quantity 11
5.8 Auto Mode 11
5.9 On-Vehicle Clean 13
VI. Service and Maintenance 16
6.1 Handling, Storage and Installation Environment 16
6.2 Common Quick-Wear Parts and Consumables 16
6.3 Precautions and Solutions to Common Problems 17
Appendix I: Fuel System Pressure Gauge of Typical Vehicles 18

I. Introduction to Injector Cleaner & Tester

Welcome to use Injector Cleaner & Tester manufactured by Shenzhen SmartSafe Tech Co., Ltd. It is a mechatronic product that combines ultrasonic cleaning technology with microprocessor oil pressure control cleaning and testing technology. It is capable to simulate various working conditions of engine and perform cleaning and testing for injector.

1.1 Brief Introduction

The User Manual is applicable to the following product:

- Injector Cleaner & Tester: a desk 6-cylinder injector cleaner and tester.

1.2 Functions and Features

Main Functions

- **Working mode selection:** Select EFI, GDI and PIEZO operating modes according to the injector types.
- **Set:** To configure the system settings of the device.
- **Resistance test:** Through the pulse signal line, the internal resistance of up to six injectors can be tested simultaneously to determine whether the injector circuit condition is normal.
- **Ultrasonic clean:** To perform ultrasonic cleaning on multiple injectors at the same time, removing carbon deposits on injectors completely.
- **Leakage test:** To test the leakage and dribbling conditions of injectors under system pressure.
- **Uniformity/Spray:** To detect the uniformity of the fuel injection quantity of each injector and monitor the spray status of injectors thoroughly and carefully by using the backlight, and to reverse flush injectors.
- **Injection quantity:** To detect the amount of fuel injected normally by injectors in 20 seconds.
- **Auto Mode:** under specific working conditions and parameters, the precise simulation of test of injectors under various working conditions
- **On-vehicle clean**: Coming with a variety of disassembly-free cleaning connectors, the device can be used to perform On-vehicle clean and maintenance for various vehicle models.

  ⓘ ***Note: This function is only available for EFI working mode.***

Main Features

- Adopting ultrasonic cleaning technology, Injector Cleaner & Tester presents a strong cleaning ability;
- The product also adopts fuel pressure adjustment and control technology by microcomputer, which can ensure stable fuel pressure and wide adjustable range. It is applicable to vehicles equipped with a variety of gasoline injection systems. Meanwhile, the automation of injectors' cleaning and testing processes can be realized.
- Thanks to the adoption of microcomputer automatic control and digital display technologies, the cleaning and testing processes can be controlled automatically and the parameters of the main status can be monitored in real time.

1.3 Working Environment and Specifications

Specifications:

Power: AC110V, 50Hz/60Hz
AC220V, 50Hz/60Hz
Mechanical Power: 500W
Fuel Tank Capacity: 2500ml
Ultrasonic Cleaning Machine Power: 100W
Working Pressure: 0~9bar
Simulation Test Speed Range: 100~9900rpm (step length: 10rpm)
Timing Range: 1~9999s
Pulse Width Range: 0.1~25ms (step length: 0.1ms)
Resistance Test Range: 0~300KΩ

Working Environment:

Environment Temperature: 0℃~45℃
Relative Humidity: ＜85%
Strength of External Magnetic Field: ＜400A/m
Open fires is strictly prohibited within 2m.

II. Structure of Injector Cleaner & Tester

2.1 Structure

The schematic diagram of Injector Cleaner & Tester is shown in Figure 2.1:

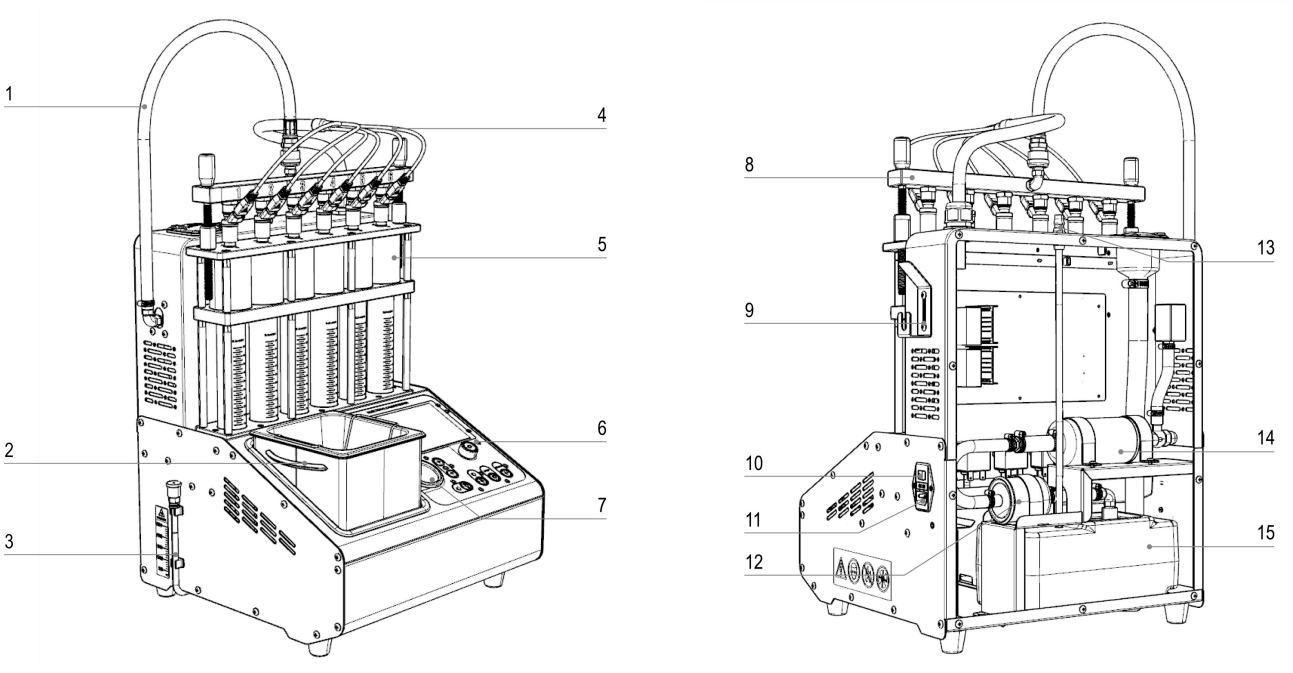

Figure 2.1 Schematic diagram

1-Oil supply pipe; 2- Ultrasonic cleaner; 3- Oil tank liquid level pipe+Oil tank drain pipe;
4- Pulse signal line; 5-Uniformity/Spray Observation Glass; 6- Control panel (operation buttons and knobs);
7- Pressure Gauge; 8- Fuel distributor assembly; 9-Pulse signal line fixed position; 10- Power switch;
11- Power Socket ; 12- Filter; 13- Oil return port; 14- Fuel pump; 15- Fuel tank

ⓘ ***Attention: There may be slight difference between the illustrations in this manual and the actual product. The actual product prevails.***

2.2 Control Panel

The control panel is shown in Figure 2.2:

Figure 2.2 Diagram of control panel

III. Installation and Connection

3.1 Installation

The installation steps are as follows:

1） Move the packaged machine to a flat surface.

2） Check if the packaging, machine, accessory box, user manual, power cord and etc. are complete.

3.2 Connection

Take the power cord out of the packaging box and plug it into the power input port on the right side of the machine.

IV. Operation Procedures for Cleaning and Testing of Injectors

4.1 Preparations

1） Remove the injector from the vehicle and check if the rubber seal of the injector is damaged. If it is damaged, replace it with a seal of the same type before cleaning and testing to avoid leak. Put the injector into gasoline or detergent, carefully remove the greasy dirt outside and then wipe it with a soft cloth.

2） Observe the test solution level to ensure that there is enough test solution in the tank. Pour the test solution into the tank from the filling port on the upper left corner of the device and observe the level through the level display tube. In most cases, fill 2000ml of test solution into the fuel filling port. Pay attention to the filled test solution shall not exceed the warning line.

3） Turn on the power switch on the left of the cabinet.

4） Add an appropriate amount of cleaning agent into the ultrasonic cleaning tank to immerse the needle valve of the injector. Pour ultrasonic detergent into the ultrasonic cleaning basin so that the needle valve of the injector is covered by the detergent.

5） Put the injector into ultrasonic cleaning tank (the end connected to the wire is facing upwards, and the pointed foot is facing downwards).

ⓘ ***Attention: The main unit of the device uses test solution for uniformity/spray test, leakage test, injection quantity test and auto. mode test. The ultrasonic cleaner uses the cleaning solution. Test solution and cleaning***

solution are not included in the standard configuration and can be purchased separately.

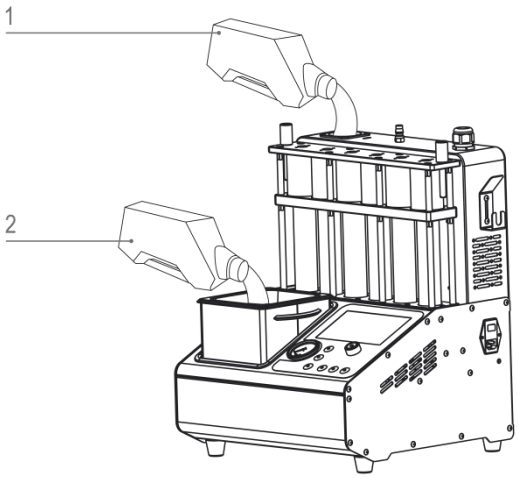

Figure 4.1

1- Schematic diagram of the testing solution; 2- Schematic diagram of cleaning solution.

4.2 Cleaning and Testing Sequences

It is recommended to carry out the complete cleaning and testing procedures in the following order.

- Resistance Test
- Ultrasonic clean
- Leakage test
- Uniformity/Spray test
- Injecting quantity test
- Auto Mode test

According to different test items, select the corresponding parameters and set them. See "**V. Operation Processes**" for details.

4.3 Cleanup after Operation

After the end of cleaning and testing, a cleanup should be done, which includes:

- Press the fuel drain button on the control panel to drain test solution to a fuel container.
- Switch off the power switch and unplug the power plug.
- Pouring out all cleaning solution from the ultrasonic cleaning pool completely shown in Figure 4.2, and wipe the ultrasonic cleaning unit with a soft dry cloth.

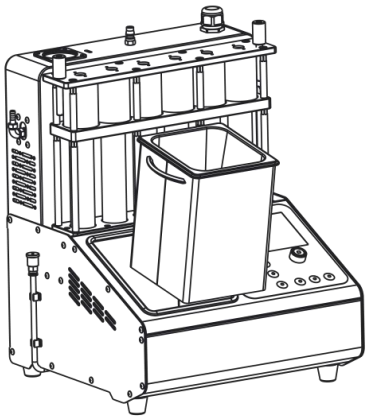

Figure 4.2

- Wipe the table top of the machine with a soft dry cloth.
- To avoid volatilization, drain all the test solution from the fuel tank. If it can be used again, store it in a safe place. If it is dirty and cannot be used any more, dispose of it according to relevant regulations.

V. Operation Processes

5.1 Operation Mode Selection

After turning on the device, the system will enter the operation mode selection interface as shown in the below figure. Please select the operating mode (EFI, GDI and PIEZO) according to the injector types .

ⓘ ***Note:***

Different operation modes may have different workflows and parameters. Please confirm the injector type and select the correct operation mode, otherwise the injector may be damaged.

Figure 5.1

5.2 System Setting

This function is used to change the system language, modify system parameters and view software version information.

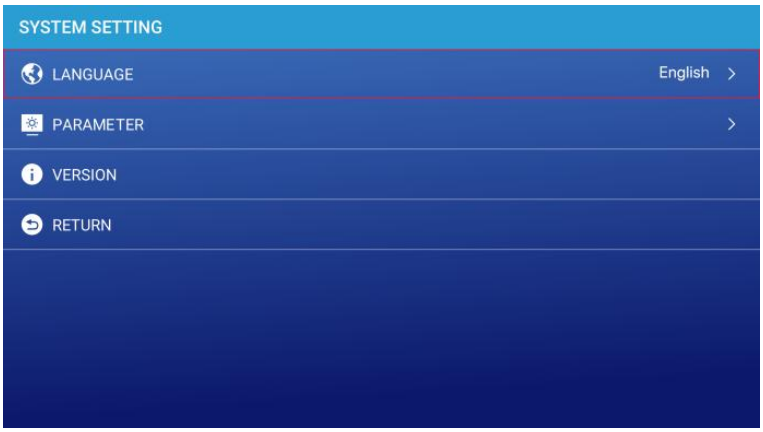

Figure 5.2

5.2.1 Language Selection

In order to meet the needs of different countries and regions, multiple languages are available. Users can choose the appropriate language as needed.

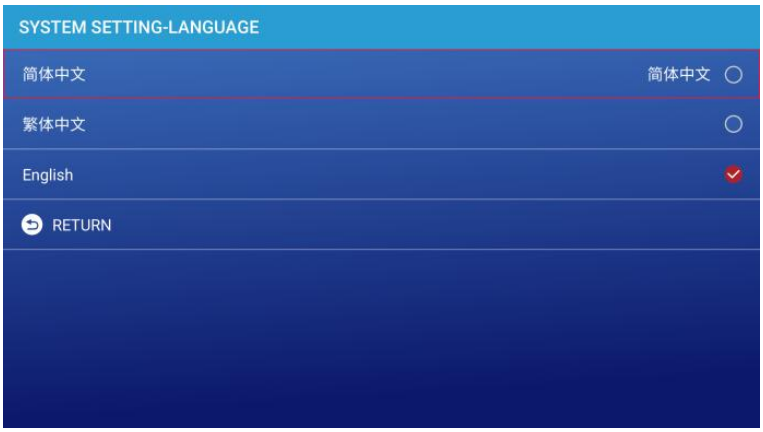

Figure 5.3

5.2.2 Parameter

Users can adjust screen brightness, system volume and restore factory settings as needed.

ⓘ ***Note:***

Restoring factory settings will clear the parameters set by users, please operate with caution.

Figure 5.4

5.2.3 Version

Click **[Version]** button to check information of the current software version.

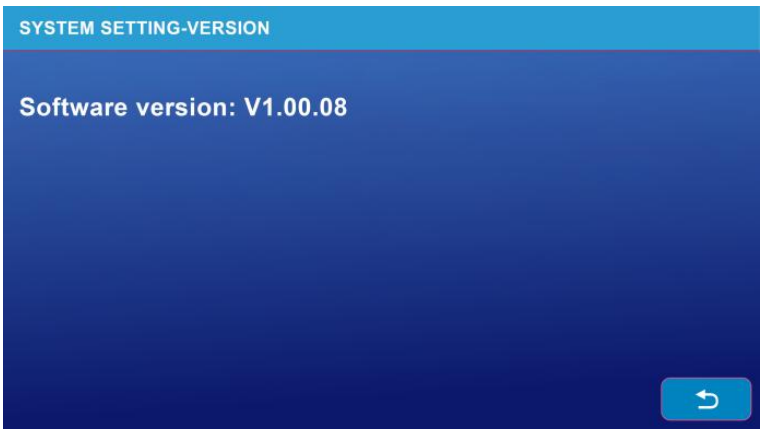

Figure 5.5

5.3 Resistance Test

This function is used to determine the quality of the fuel injectors by detecting their resistance.

Method and Steps:

1） Connect the pulse signal line to the corresponding injector according to the color and serial number on the pulse signal line connectors and the fuel distributor.

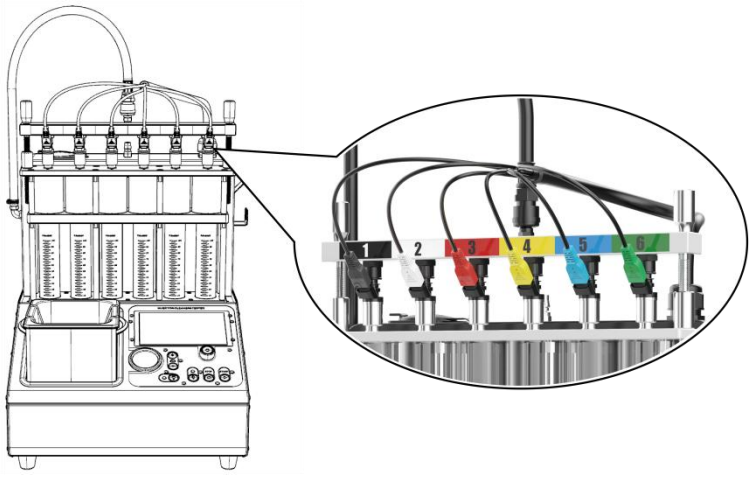

Figure 5.6

2） Select **[Resistance Test]** on the main interface enter the below interface. Press **[Start]** button to start the test.

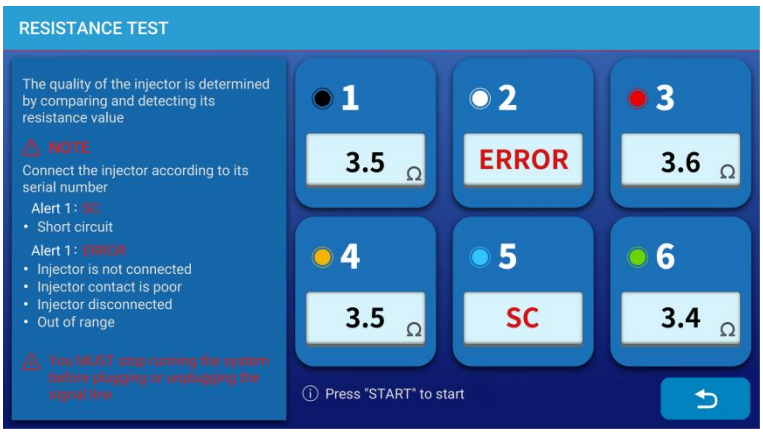

Figure 5.7

3） The test results will be displayed below the corresponding serial number. If the fuel injector passes the test, its resistance value will be displayed below the corresponding serial number; If **[SC]** is displayed, it indicates a short circuit; and if **[ERROR]** is displayed, it indicates that there is a connection fault, poor contact, or excessive resistance issue with the fuel injector.

⚠ ***Warning!***

You MUST stop running the system before plugging or unplugging the pulse signal line.

5.4 Ultrasonic Cleaning

Ultrasonic cleaning is an advanced cleaning method that uses the penetration and cavitation shock waves generated by the propagation of the ultrasonic waves in the medium to run a power cleaning on objects with complex shapes, cavities and pores, in order to remove stubborn carbon deposits on the injector thoroughly.

Method and Steps:

1） Put the externally cleaned injector on the cleaning bracket in the cleaning tank;

2） Add an appropriate amount of cleaning agent into the ultrasonic cleaning machine (generally, the level of cleaning agent should be some 20mm above the needle valve of the injector);

3） Connect the pulse signal lines with injectors properly;

4） Select **[Ultrasonic cleaning]** on the main interface and set the time according to the demand (the default time is 600s), as shown in the below figure. Press **[Start]** button to start the cleaning.

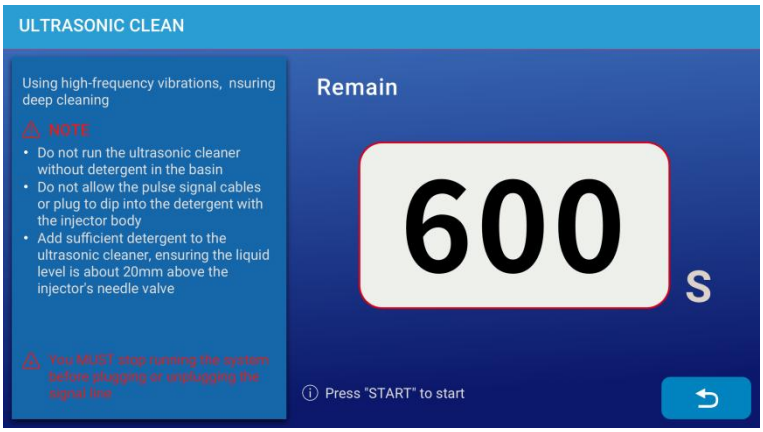

Figure 5.8

5） The system will step automatically when the cleaning ends.

6） Take the injectors out of the cleaning tank and wipe off the cleaning agent on them with a soft cloth to prepare for the next operation.

ⓘ***Note:***

1) ***It is strictly forbidden to open the ultrasonic system under the circumstances that cleaning agent has not been added into the ultrasonic cleaning pool. Otherwise, the ultrasonic equipment may be damaged easily.***

2) ***It is strictly prohibited to immerse the pulse signal line connector along with the injector into the ultrasonic pool for cleaning. Otherwise, the pulse signal line connector can be damaged easily.***

5.5 Leakage Test

Leakage test is to detect the leakage of the needle valve of the injector under system pressure and to detect whether the injector is dribbling.

Method and Steps (See 5.6 Uniformity/Spray for Installation Method)

1） Before leakage test, if there is test solution in the transparent tube, press the fuel drain button on the control panel to drain the solution out of the transparent tube.

2） Select **[Leakage Test]** on the main interface and press **[Start]** button. The system will start to work. Judge the leakproofness of the injector by observing whether the injector is dribbling or not. Typically, the dribbling should be no more than one drop in one minute (or technically). The time set in the system is 60 seconds by default, and the pressure value set for leakage test function should be 10% higher than that set by the manufacturer. At this time, the pressure can be adjusted via **[Pressurization⊕]** and **[Depressurization⊖]** buttons, as shown in the below figure.

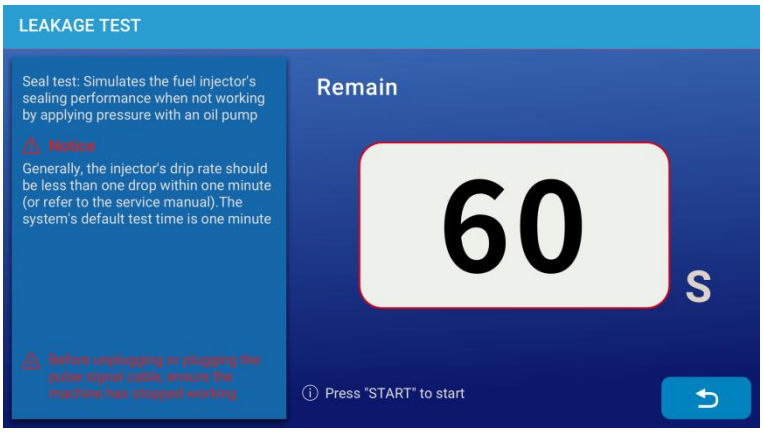

Figure 5.9

3） The system will stop automatically after completion of the test.

5.6 Uniformity/Spray

Uniformity test is to detect whether the differences between the injection quantities of injectors meet the requirements or within the specified error range under the same working conditions of the injectors on the same vehicle. The test can reflect the electrical characteristics and the change in orifice diameter of the injectors, as well as the combine effects of the blockage and other factors on the injector. Sprayability test is to detect the atomization performance of injectors by observing the injection condition and atomization of injectors when operating under certain working conditions.

5.6.1 Installation Method and Test Steps for Injectors

1) Select the appropriate connector according to the type of injector, install the sealing ring (check if the sealing ring of the connector is in good condition) and then mount the connector with sealing ring at the corresponding coupling element below the fuel distributor.
2) Install the injector in the forward direction (apply a little lubricant on the “O” ring of the injector).
3) Adjust the screws to fix the fuel distributor and injector assembly in the oil filler hole of the upper cover and tighten the compression screws on both sides evenly. The installation diagram is shown in Figure 5.10.

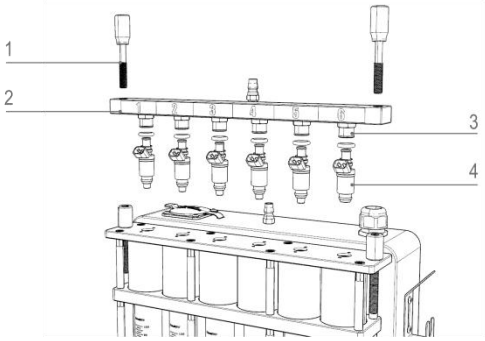

Figure 5.10

1-Fuel distributor compression screw; 2-Fuel distributor assembly; 3-Connector; 4-Injector.

4) Connect the pulse signal line of the injector properly. If there is test solution in the fuel tube, press the fuel drain button on the control panel to drain the test solution out of the transparent tube.
5) Click **[Uniformity/Spray]** button on the main interface as shown in Figure 5.11, set corresponding operating parameters and then press **[Start]** button to start the test (***Note: Press or release the fuel drain button during the operation to drain or stop draining oil***); the system pressure can be adjusted by **[Pressurization⊕]** and **[Depressurization⊖]** buttons on the control panel.
6) The system will stop automatically after the test is completed.

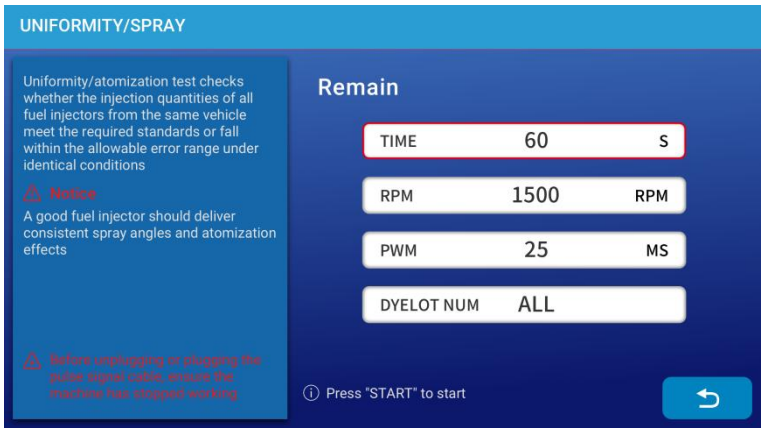

Figure 5.11

5.6.2 Reverse flushing

Reverse flushing is limited to the top-supply injector by connecting the reverse flushing connector under Uniformity/Spray. Test solution enters from the outlet of the injector and flows out from the inlet during reverse flushing. Reverse flushing can wash away the dirt inside the injector and dirt attached to the filter.

Method and Steps:

1） Find the reverse flushing connector (and select a supporting “O” ring to install it on the connector) installed below the fuel distributor;

2） Install the top-supply injector in reverse direction (outlet up, inlet down);

3） Select the corresponding coupling element under the injector according to the shape of injector

4） Adjust the screws to fix the fuel distributor and injector assembly in the oil filler hole of the upper cover according to the height of injector and tighten the compression screws on both sides evenly, as shown in Figure 5.12;

5） It is recommended to press the fuel drain button on the control panel to drain the remaining fuel in the transparent tube to avoid overflow of test solution before reverse flushing.

6） Connect the pulse signal line of the injector properly; set the operating parameters and press **[Start]** button to execute reverse flushing function; the system pressure can be adjusted by **[Pressurization ⊕]** and **[Depressurization ⊖]** buttons on the control panel during reverse flushing.

7） The system will stop automatically after completion of the cleaning.

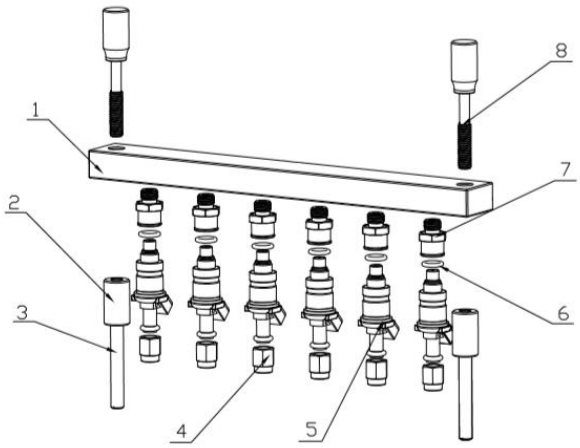

Figure 5.12

1-Fuel distributor 2-Knurled nut 3-Adjustable screw 4-Couplers
5-Injector 6-O-ring 7-Reverse adaptor 8- Compression screw

5.7 Injection Quantity

Injection quantity is used to detect the amount of fuel injected normally by injectors for 20 seconds and then determine if it is consistent with the injection quantity of standard injectors (or within its error range), referring to the relevant technical manual of the injector). The change or deviation of the change reflects the change (wear) in the orifice diameter or blockage of the injector, eliminating interference due to changes in electrical parameters of the injectors.

Method and Steps (See 5.6 Uniformity/Spray for Installation Method)

1） Before the test, if there is test solution in the transparent tube, press the fuel drain button on the control panel to drain the solution out of the transparent tube.

2） Select **[Injection Quantity]** on the main interface and press **[Start]** button. The system will start to work. At this time, the pressure can be adjusted via **[Pressurization⊕]** and **[Depressurization⊖]** buttons, as shown below figure.

Figure 5.13

3） The system will stop automatically after completion of test.

5.8 Auto Mode

Automatic cleaning test includes the above-mentioned several test methods (15-second constant injection fuel injection amount test, idle speed, medium speed, high speed, variable acceleration and deceleration, variable pulse width test). This function can simulate various working conditions of the engine more realistically and comprehensively, and can comprehensively test various performance parameters of the injector.

Method and Steps (See 5.6 Uniformity/Spray for Installation Method)

1） Before the test, if there is test solution in the transparent tube, press the fuel drain button to drain the solution out of the transparent tube.

2） Select **[Auto Mode]** on the main interface and then select a test mode. The default mode is mode 1 (See “Flow Chart of Auto Mode” for details on modes). Press **[Start]** button to start the test.

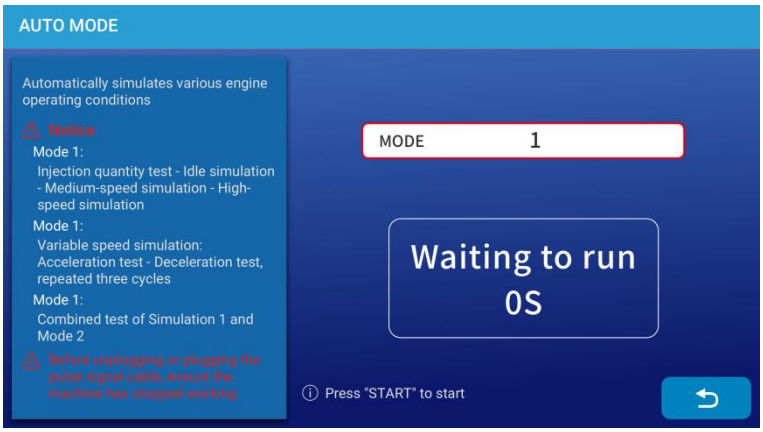

Figure 5.14

3） During system operation, the pressure can be adjusted via **[Pressurization⊕]** and **[Depressurization⊖]** buttons.

4） When the test is over, the buzzer sounds and the equipment will automatically stop.

Flow Chart of Auto Mode

There are 3 modes for Auto Mode: Mode 1, Mode 2 and Mode 3. Mode 1 and Mode 2 are shown below; while Mode 3 is to run Mode 2 after running Mode 1.

Mode 1 of Auto Mode

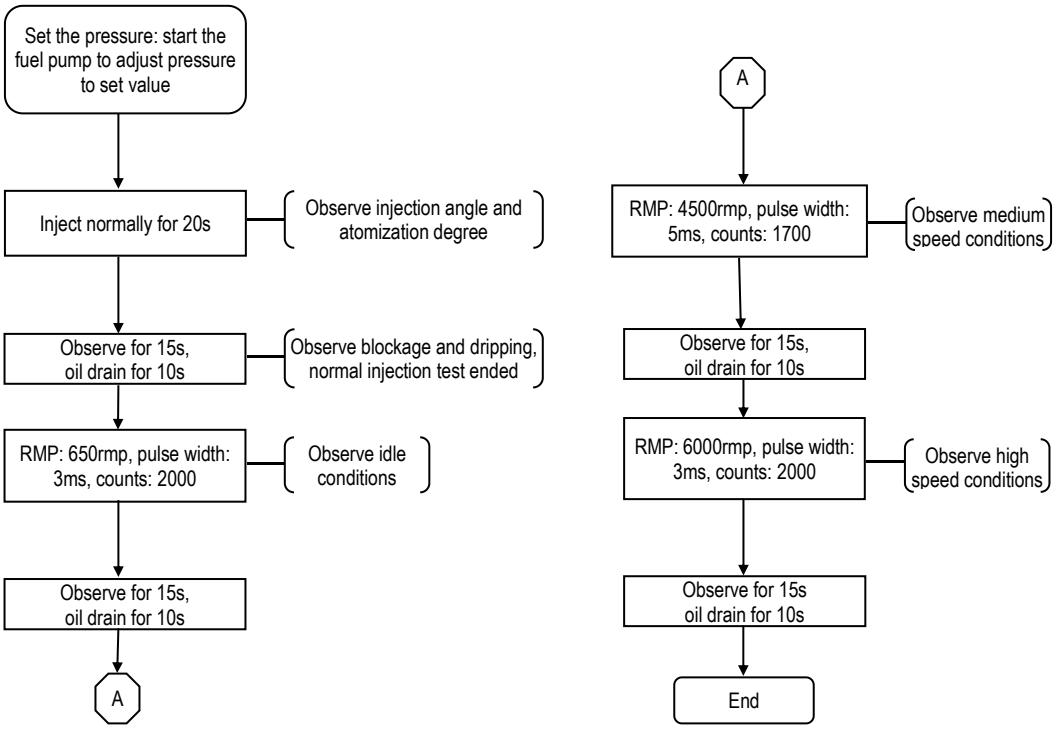

Mode 2 of Auto Mode

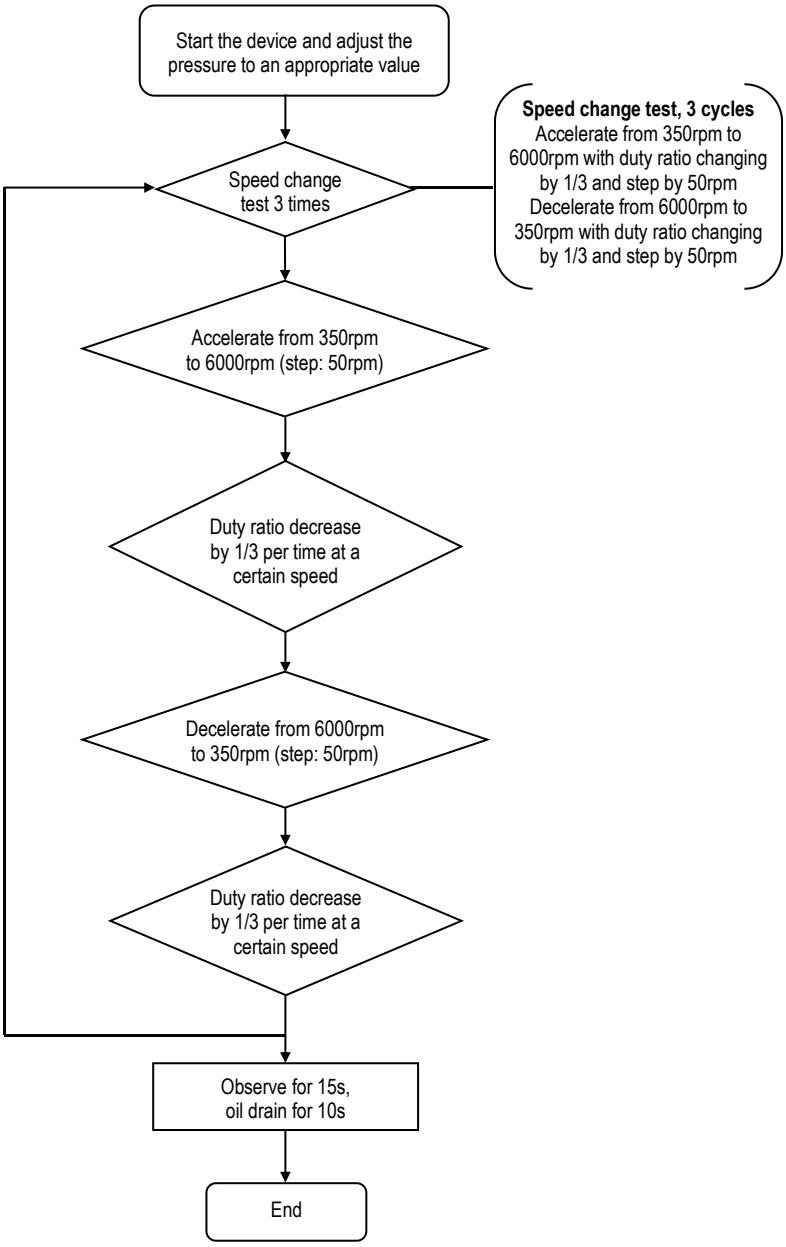

5.9 On-Vehicle Clean

ⓘ ***Note:***

This function is only used for EFI operation mode.

After a period of use, the oil supply system of the engine may be blocked or become clogged due to buildup of dust and impurities in fuel channel. In addition, the carbon deposits and gum made by combustion can easily adhere to the injectors, inlet and outlet ports, inlet and outlet hoses, throttle and combustion chamber. So the fuel supply system, combustion chamber and injectors of the engine must be cleaned in time. On-vehicle clean is a labor-saving and time-saving solution.

5.9.1 Procedures

1) Before performing On-vehicle cleaning, drain the liquid from the fuel tank into a pre-prepared container. If the drained liquid contains a large amount of impurities and is not suitable for reuse, please dispose of this waste liquid properly. Then add a small amount of automotive engine On-vehicle cleaning fluid into the fuel tank and clean it. If the drained

liquid is relatively clean, please store it properly for future use.

2) Add automotive engine On-vehicle cleaning fluid into the fuel tank of injector cleaner & tester.
3) Connect the pipeline of Injector Cleaner & Tester with that of the vehicle. For details, see **"5.9.2 Line Connection"**.

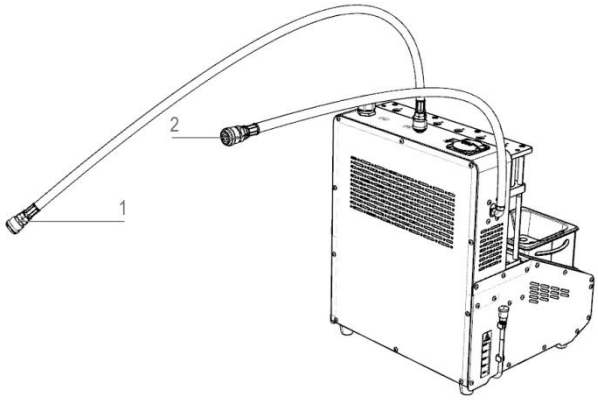

Figure 5.15 Installation diagram

1- Fuel-return hose from engine; 2- Fuel-inlet hose to engine

4) As shown in the following figures: Choose **[On-vehicle clean]** function on main menu, set the time, press **[Start]** button and then start the engine for cleaning. Refer to the technical requirements of various vehicle models to adjust the pressure via **[Pressurization ⊕]** and **[Depressurization ⊖]** buttons. Press **[Stop]** button at any time to stop the cleaning.

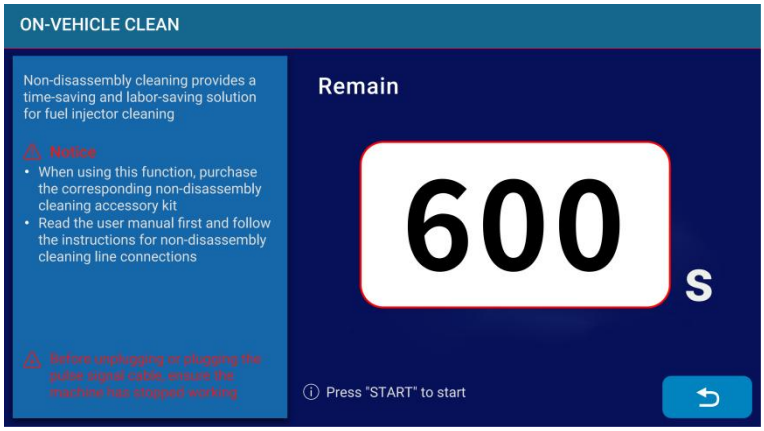

Figure 5.16

5.9.2 Line Connection

There are two cases for the line connection: one is the connection with fuel-return hose and the other is the connection without the fuel-return hose.

Connection with fuel-return hose

1) Disconnect the fuel supply hoses (C, D) and fuel return hoses (A, B) of the engine fuel system (when disconnecting the fuel line connectors, cover them with towels). Choose proper connectors and connect them to the B end and C end separately, and then connect the other ends to corresponding return hose and outlet hose of the device. See Figure 5.17.
2) Connect the two other disconnected ends (A, D) with a proper hose, or remove the fuel pump fuse, or disconnect the power cable of engine fuel pump.

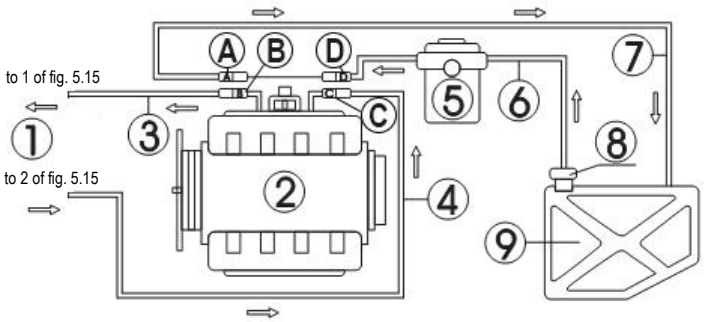

Figure 5.17 Line Connection 1

1-CNC Injector Cleaner & Tester; 2-Engine; 3- Fuel-return hose from engine; 4- Fuel-inlet hose to engine;

5-Auto filter; 6-Engine fuel supply hose; 7-Engine fuel return hose; 8-Fuel pump; 9-Fuel tank

Connection without fuel-return hose

1) Disconnect the fuel supply hoses (E, F) of the engine fuel system (when disconnecting the fuel line connectors, cover them with towels), and then choose a suitable connector, connect it to the E end and reconnect the fuel outlet hose of the device. Hang the fuel return hose. See Figure 5.18.
2) Block the other end of the disconnected end (F) with a stopper (for fuel pump with fuel return function only) or remove the fuse of fuel pump or disconnect the power cable of engine fuel pump.

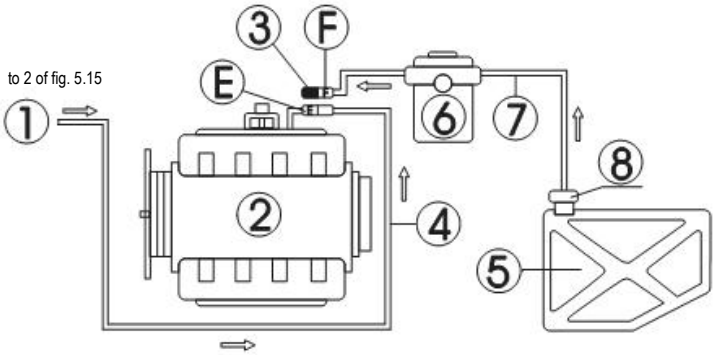

Figure 5.18 Line Connection 2

1-CNC Injector Cleaner & Tester; 2-Engine; 3-Stopper; 4- Fuel-inlet hose to engine;

5-Fuel tank; 6- Fuel filter; 7-Engine fuel supply hose; 8-Fuel pump

5.9.3 Tidy Up After On-vehicle Clean

1) After the On-vehicle clean is completed, turn off the ignition switch of the vehicle. Restitute the hose connection, start the engine and accelerate properly to check if there is any fuel leakage at the connectors or in the hoses.
2) Please clean the fuel tank and the lines of the device with test solution at the end of the on-vehicle cleaning, the specific procedures are: drain the detergent left in the fuel tank first and dispose it according to its cleanliness. Add a small amount of test solution into the fuel tank, connect the fuel outlet hose of the device to the oil return port and power on the device. Select “Leakage test” item and press **[Start]** button to run the device for about 2~3 minutes. After the running has stopped, drain the test solution from fuel tank and dispose the drained liquid according to relevant regulations.
3) Clean up the site and tidy up the washing machine for later use.

ⓘ ***Note:***

1) When cleaning, care must be taken as the detergent is inflammable. Prepare at least one effective fire extinguisher.

2) Be sure that all lines are well connected and there is no leakage before performing cleaning.

VI. Service and Maintenance

6.1 Handling, Storage and Installation Environment

It is recommended to lift and carry the device with a manual or motorized forklift.

1. **Handling**
   A. Mechanical handling and long-distance transportation are strictly prohibited when unpackaged.
   B. When unpackaged, use a soft sling for lifting or handle it manually to avoid scratching the body.
   C. The fluid in the fuel tank should be drained before packaging and handling to prevent spillage due to shaking.
   D. The device should be placed on the base and put in the packaging box before handling. Violent vibrations and impacts should be avoided. The machine should be wrapped with materials similar to plastic bags. After placing it into the packaging box, a type of filling materials, such as foam or sponge, should be added between the device and the inner wall of the packaging box to preventing from being scratched by shaking.
   E. The maximum angle of inclination for the device must not exceed 45°. Keep upright!
2. **Storing**
   A. The device should be stored in a dry place that is not exposed to the rain before unpacking.
   B. The bar machine should be placed in a room that is not exposed to direct sunlight and is well ventilated to avoid rain.
3. **Installation Environment**
   A. The distance between the equipment and the surrounding walls or other objects should be more than 200mm. The machine should be placed in a ventilated environment with the ambient temperature between 0℃ and 45℃. Keep it away from fire.
   B. To ensure safe operation, make sure that the power outlet is grounded before switching on the power supply.

⚠ ***Warning!***

If you use the equipment with the power cable being replaced with another one, the level of the power cord should be higher than or equal to that of the original power line.

6.2 Common Quick-Wear Parts and Consumables

1. Selection and Replacement of Cleaning Agent and Test Solution

Test solution is used when the device is testing and cleaning agent is used for ultrasonic cleaner. Test solution and cleaning agent are not included in the standard configuration and can be purchased separately.

ⓘ ***Note:***

When the test solution has been used for a period of time, a lot of impurities will be accumulated in it. Test solution containing lots of dirt cannot be used. Otherwise, the fuel pump and injectors may be blocked. When replacing the test solution, unscrew the plug at the bottom of the machine to drain the solution. It is best to drain the residual liquid and then inject a small amount of clean test solution in order to clean the interior.

2. Replacement of “O” Ring

The “O” ring will deform after many times of use, which can cause leakage easily. Therefore, it should be replaced frequently.

3. Replacement of Purification Accessories

Filter is a purification accessory and needs to be replaced regularly. The replacement cycle should be decided according to the service condition and frequency of use. It is recommended to replace the filter once every three months to ensure the normal operation of the system. After replacement, leak tightness test should be carried out to check if there is any leak at the interface.

The equipment filter has been fixed behind the main unit, if you want exchange it you must remove the back board and loose the clamp, take the filter out and exchange a new one.

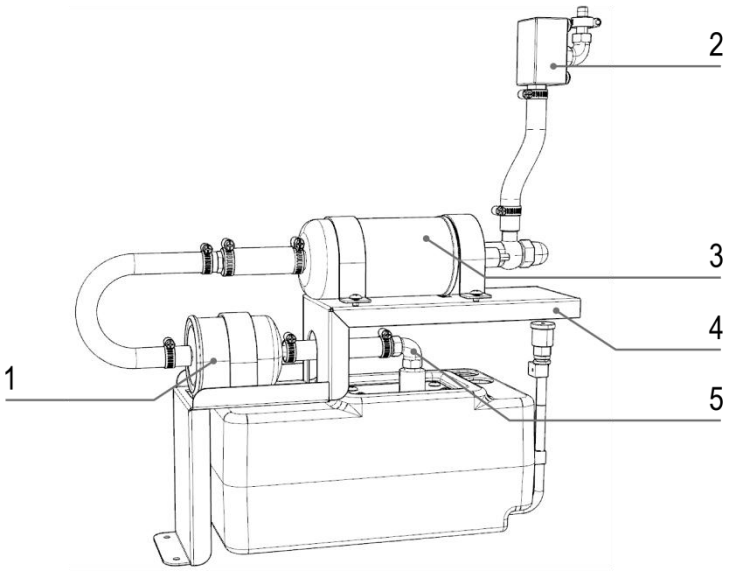

Figure 5.19

1 -Filter; 2 -Shunt block; 3- Fuel pump; 4 -Fuel pump bracket; 5- Fuel suction pipe

6.3 Precautions and Solutions to Common Problems

6.3.1 Precautions

1） The transparent tubes are made of glass. So, do not place other items around the device to avoid scratching and fragmenting the tubes.

2） Disassembly of the tubes should be performed after the system pressure is displayed as zero.

3） It must be ensured that the power supply provided is grounded well.

4） Take good care of the machine. If the protective film on the control panel is stained with cleaning agent, please wipe it off in time. Also, keep the pulse signal lines away from the cleaning agent and test solution.

⚠***Warning!***

Blind and imprudent overhauls can lead to the expansion of the fault area of the device, causing difficulties for formal maintenance. When the device is powered on, the electrical system inside the machine contains factors that can cause danger! Careless operations can result in personal injury accidents, which can lead to physical disability and even death in serious accidents.

6.3.2 Solutions to Common Problems

1. No response on startup

Check if the fuse at the bottom right side of the machine is damaged. If it is damaged, please change it.

2. Fuel leak at coupling element of fuel distributor

Fuel leaked at coupling element of fuel distributor. Please check whether the “O” ring installed matches and if it deformed or damaged. If it does not match or is damaged, please change it. The two adjusting screws should not be too tight, which may also cause the coupling element of fuel distributor to leak fuel.

3. Test solution in the transparent tubes can be drained completely by pressing the fuel drain button on the control panel.

Multiple drainages may be required if there is a large amount of test solution in the transparent tube.

Appendix I: Fuel System Pressure Gauge of Typical Vehicles

Manufacturer	Model	System Pressure (kg/cm2)
Toyota	Toyota 3.0	2.84
	Toyota Previa	2.7-3.3
	Lexus 300 400	2.65-3.04
	Camry 3.0	2.65-3.04
	Land Cruiser	3.0
	Corolla	2.7-3.1
Honda	Accord 2.0 2.2	2.85
	Civic 1.5L	2.55-2.85
	Legend 3.2L	2.7-3.04
Nissan	Nissan	2.5
	Maxima	2.5
	300EX	2.06-2.55
Mitsubishi	V63000	3.5
Mazda	323	2.0-2.2
	626	2.5-2.9
	929	2.5-2.9
BMW	528	2.7-2.9
Mercedes-Benz	2.3L	2.04-4.08
	2.6L	2.04-4.08
	3.0L	2.04-4.08
Volvo	Volvo	2.7—2.9
Volkswagen	Santana 2000	2.2—26.5
Audi	6-cylinder	2.4—2.7
	5-cylinder, 4-cylinder	4.5—5.0
GM	Buick Century	2.9—3.3

Manufacturer	Model	System Pressure (kg/cm2)
	Buick Park Avenue	2.9—3.3
	Cadillac 5.7	2.9—3.3
	Chevrolet LuminaAPV	2.3—3.0
	Chevrolet Corsica	2.5—3.0
Ford	Tempo 2.3L	2.8
	Lincoln TownCar	2.06—3.08
Chrysler	Beijing Cherokee 213	2.73
	Dodge 3.3L Sanxing Dodge	3.37
Hyundai	Sonata	265—2.75
DAEWOO	Daewoo	2.8—30
FAW-VW	Jetta King	2.7-2.9
	Golf	2.5-2.8
	Hongqi	2.5-3.0
FAW Jetta	Jetta AT	2.6-2.9
FAW Audi	A6	2.5-2.8
Shanghai Volkswagen	Era Superman	2.8-3.0
Shanghai Passat	B5	2.7-3.1

Warranty

This warranty applies only to users who have purchased SmartSafe's products through regular procedures.

SmartSafe shall provide a warranty against material or craftsmanship defects for 12 months from the date of purchase on its products. Damages to the device or its components caused by abuses, unauthorized modifications, uses for a purpose other than for which it is intended, or operations not following the manner specified in the manual, etc. are not covered by this warranty. Compensation for the damage to instrument of the automobile due to the defect of the device is limited to repair or replacement, SmartSafe is not responsible for any indirect or accidental loss. SmartSafe will judge the attributes of the equipment damage according to its specified test method. None of SmartSafe's dealers, employees and business representatives has the authority to make any confirmations, reminders or promises related to the company's products.

Disclaimer Statement

The above warranty can substitute warranties in any other forms.

Order Notice

Replaceable and optional parts can be ordered directly from SmartSafe authorized distributors. Your order should include the following information:

Order quantity

Part number

Part name

Customer Service Center

When the device requires maintenance, please first contact the SmartSafe after-sales department to obtain repair instructions. After confirming that the device needs to be returned to the factory, please send the equipment along with the relevant warranty documents to the designated address. If the device is still within the warranty period, SmartSafe will provide free repair service. If the device is out of warranty or damaged due to human error, SmartSafe will provide paid repair service. In such cases, the repair cost and shipping fees shall be borne by the customer.

SmartSafe address:

3310, Building 11, Tianan Cloud Park, Bantian Street, Longgang District, Shenzhen, Guangdong, P. R. China

Zip code: 518110

SmartSafe Website: http://www.newsmartsafe.com

Statement:

SmartSafe reserves the rights to make any change to product designs and specifications without notice. The actual object may differ a little from the descriptions in the manual in physical appearance, color and configuration. We have tried our best to make the descriptions and illustrations in the manual as accurate as possible, and defects are inevitable, if you have any question, please contact local dealer or after-sale service center of SmartSafe, SmartSafe does not bear any responsibility arising from misunderstandings.