Copyright Information

Copyright © 2026 by SHENZHEN SMARTSAFE TECH CO.,LTD. All rights reserved. No part of this publication may be reproduced, stored in a retrieval system, or transmitted in any form or by any means, electronic, mechanical, photocopying, recording or otherwise, without the prior written permission of SMARTSAFE.

Neither SMARTSAFE nor its affiliates shall be liable to the purchaser of this unit or third parties for damages, losses, costs, or expenses incurred by purchaser or third parties as a result of: Accident, misuse, or abuse of this unit, or unauthorized modifications, repairs, or alterations to this unit, or failure to strictly comply with SMARTSAFE operating and maintenance instructions. SMARTSAFE shall not be liable for any damages or problems arising from the use of any options or any consumable products other than those designated as Original SMARTSAFE Products or SMARTSAFE Approved Products by SMARTSAFE.

All information, specifications and illustrations in this manual are based on the latest information available at the time of printing. SMARTSAFE reserves the right to make changes at any time without prior written or oral notice.

Trademark Information

SmartSafe is a registered trademark of SHENZHEN SMARTSAFE TECH CO.,LTD. in China and other countries. All other SMARTSAFE trademarks, service marks, domain names, logos, and company names referred to in this manual are either trademarks, registered trademarks, service marks, domain names, logos, company names of SMARTSAFE or are otherwise the property of SMARTSAFE or its affiliates. In countries where any of the SMARTSAFE trademarks, service marks, domain names, logos and company names are not registered, SMARTSAFE claims other rights associated with unregistered trademarks, service marks, domain names, logos, and company names. Other products or company names referred to in this manual may be trademarks of their respective owners. You may not use any trademark, service mark, domain name, logo, or company name of SMARTSAFE or any third party without permission from the owner of the applicable trademark, service mark, domain name, logo, or company name. You may contact SMARTSAFE by visiting the website at www.newsmartsafe.com, or writing to SHENZHEN SMARTSAFE TECH CO.,LTD., 3310, Building 11, Tianan Cloud Park, Bantian Street, Longgang District, Shenzhen, Guangdong, China, to request written permission to use Materials on this manual for purposes or for all other questions relating to this manual.

To avoid personal injury, property damage, or accidental damage to the product, please read all the information in this chapter before using the product. This equipment is for professional technicians or maintenance personnel to use.

Contents

1. Overview 1
1.1 Product Introduction 1
1.2 Product Parameter 1
1.3 Packing List 2
2. Product Introduction 3
2.1 Four-wheel Alignment Device 3
2.2 ADAS Calibration Equipment 3
2.2.1 Base Assembly 5
2.2.2 Column Assembly 6
2.2.3 Crossbeam Assembly 7
2.2.4 Tablet Stand 8
2.2.5 Wheel Clamp Assembly 9
2.2.6 Mid-mounted Laser (LAC09-02) 11
2.2.7 Distance Measuring Panel (LAC09-01) 11
3. Four-wheel Alignment Function 12
3.1 Precautions in Use 12
3.2 Preparations 13
3.2.1 Device Activation 13
3.2.2 Use of Positioning Sticker 14
3.3 Routine Inspection 15
3.3.1 Car Selection 15
3.3.2 Vehicle Inspection 18
3.3.3 Measurement Preparation 20
3.3.4 Rolling Compensation 23
3.3.5 Caster Swing 24
3.3.6 Measurement Results 28
3.3.7 Inspection Report 29
3.4 Quick Inspection 30
3.4.1 Measurement Preparation 31
3.4.2 Rolling Compensation 31
3.4.3 Measurement Results 32
3.4.4 Inspection Report 33
3.5 Inspection Records 34
3.6 Database 36
3.6.1 Standard Database 36
3.6.2 Custom Database 38
3.7 Device Management 39

3.8 System Settings 40
3.8.1 Parameter Settings 40
3.8.2 Customer Information 41
3.8.3 Store Information 43
3.8.4 Custom 43
3.8.5 After-sales Maintenance 43
3.8.6 About 44
3.9 Terms 45
3.9.1 Geometric Center Line 45
3.9.2 Camber 45
3.9.3 Toe-in (Angle) 45
3.9.4 Kingpin Inclination 46
3.9.5 Kingpin Caster 46
3.9.6 Toe-out when Turning 20° 47
3.9.7 Thrust Angle 47
3.9.8 Max Steering Angle 47
3.9.9 Wheelbase Difference 48
3.9.10 Track Width Difference 48
3.9.11 Left (right) Lateral Offset (angle) 48
3.9.12 Axle Offset (angle) 49
3.9.13 Delay (angle) 49
3.9.14 Included Angle 49
3.9.15 Wheel Alignment 49
3.9.16 Symmetric Value 49
4. ADAS Calibration Equipment 50
4.1 Product Introduction 50
4.1.1 About ADAS 50
4.1.2 About ADAS Calibration Equipment 50
4.2 Precautions in Use 50
4.3 First Time Use 53
4.3.1 Installation of ADAS Calibration Equipment 53
4.3.2 Activate Software ADAS Calibration Function 58
4.4 Starting to Use ADAS Calibration Equipment 60
4.4.1 Prerequisites for Using the ADAS Calibration Equipment 60
4.4.2 Calibrating the Camera 67
4.4.3 Calibrate Radar Sensor 72
4.5 Maintenance and Care 78
4.6 Appendix: Calibration Target 79

4.6.1 Front Camera Calibration Target 79
4.6.2 Radar Target (Optional) 85
4.6.3 Rear View & Omnidirectional Target (Optional) 86

1. Overview

1.1 Product Introduction

The WAA613 is the world's first integrated system that deeply combines wireless 3D four-wheel alignment with intelligent ADAS calibration. It is equipped with a 75-inch large display, enabling digital visualization of calibration targets and four-wheel alignment data, thereby significantly improving maintenance efficiency and accuracy.

- Integrated operating workflow: After completing four-wheel alignment, the system can switch to ADAS calibration with one click, eliminating the need for repeated preparation.
- Digital calibration targets: The high-definition large screen displays digital targets and four-wheel alignment data in real time, saving space while providing intuitive and convenient operation.
- Bluetooth laser distance measurement: Automatically collects centering, parallelism, and height data without manual input, with visual dynamic guidance to assist adjustment.
- Intelligent screen mirroring linkage: The tablet wirelessly mirrors four-wheel alignment data to the large screen, enabling seamless data transfer and a unified interface.
- Streamlined calibration process: The ADAS software is fully optimized with clear and concise steps, supporting graphic and text guidance to reduce operational complexity.
- Extensive vehicle coverage: Supports calibration for more than 95% of ADAS-equipped vehicles worldwide, along with four-wheel alignment data; the database is continuously updated to cover mainstream brands.
- Paperless report output: Generates professional inspection and calibration comparison reports, supporting electronic sharing and digital archiving.

1.2 Product Parameter

Product parameter

Toe-in	±20°
Camber	±10°
Caster	±10°
Steering Axis Inclination	±20°
Maximum Steering Angle	±35°
Wheelbase	1940 mm~ 4600 mm
Track Width	1920 mm~ 1900 mm
Rim Diameter (Four-point Rim Clamp)	275 mm~ 640 mm
Tire Diameter (Three-point Tire Clamp)	470 mm~ 1100 mm

Digital screen

Display Format	2160p
Screen Size / Aspect Ratio	75-inch / 16:9 widescreen
Resolution	3840×2160
Operating System	Android
Network Connection	Wi-Fi
Memory	1.5G+8G
Power Supply Voltage	110~ 240V
Rated Power	138W
Standby Power	<0.5W

1.3 Packing List

For product configuration details, please consult your local dealer or check the packing list that comes with the product.

When unloading, please note: heavy equipment may fall and cause personal injury, please unload the equipment with the help of others or use appropriate auxiliary tools as needed.

2. Product Introduction

2.1 Four-wheel Alignment Device

The wireless 3D wheel aligner mainly consists of measurement units (right/left), clamps & targets (FR/FL/RR/RL), ST13 an intelligent link terminal, turntables, a steering wheel fixture, and a brake pedal fixture, all paired with a standard four-post lift.

Note: Products with different configurations have different components and accessories. Please consult the dealer or refer to the product packing list for specifics.

Measurement Unit Assembly

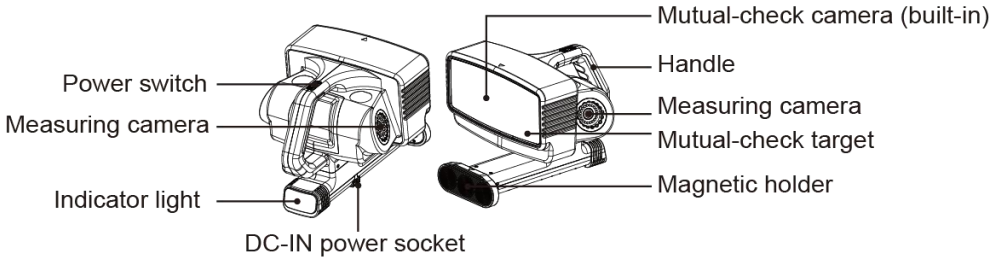

Clamp and Target

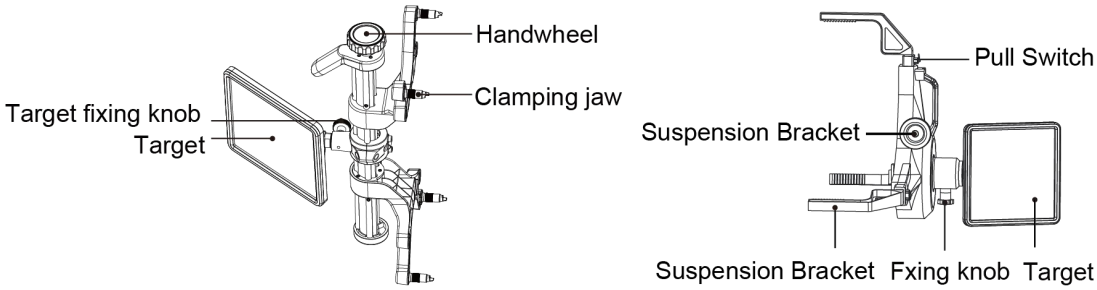

Note: The handwheel is used to adjust the height of the clamping jaw.

2.2 ADAS Calibration Equipment

The wireless 3D wheel aligner calibration equipment mainly consists of the following components:

(*This picture is not a physical picture of the product and is for explanation purposes only. Due to the continuous improvement of the product, it will be updated from time to time, please refer to the actual product).

- **Front**

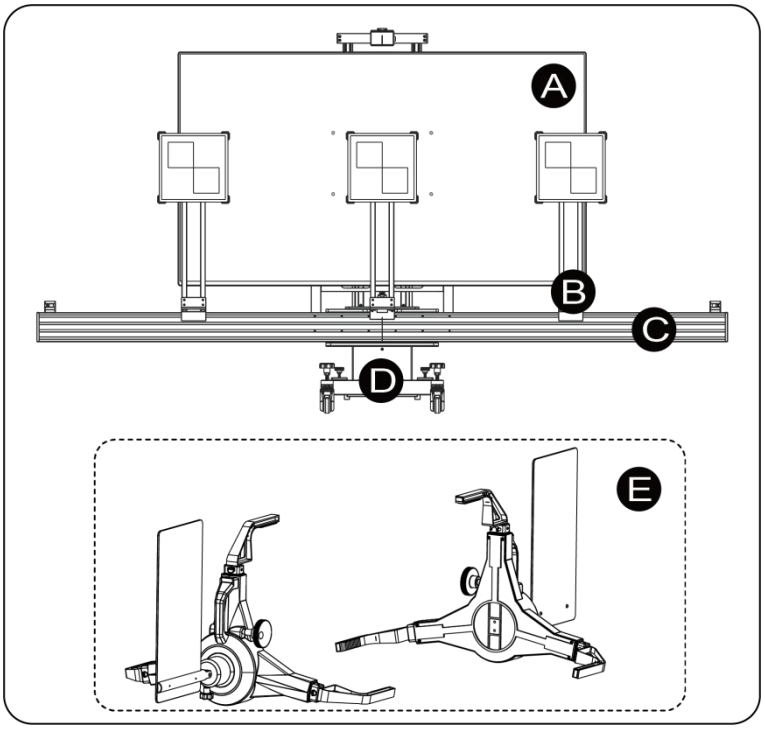

No.	Specific Description
A	**Display** Used to display the front camera calibration target.
B	**Physical target stand (optional)** For mounting the physical target (optional), the physical target and the electronic target play a complementary role.
C	**Crossbeam assembly** It is mounted on the column for placing the target stand, green bluetooth center distance meter and ACC radar target (optional).
D	**Base assembly** It is used for fixing the column, balancing the crossbeam and target holder mounted on the column, and supporting front and rear fine adjustment. There are 4 wheels on the base assembly, which is convenient for users to move the equipment.
E	**Wheel clamp assembly** Mounted on the rear wheels of the vehicle, it is used to adjust the parallelism of the calibration equipment with the vehicle by using the left and right green bluetooth distance meters on the crossbeam (for the location of the green bluetooth distance meters, please refer to the crossbeam assembly diagram in 2.2.3 Crossbeam Assembly).

- **Back**

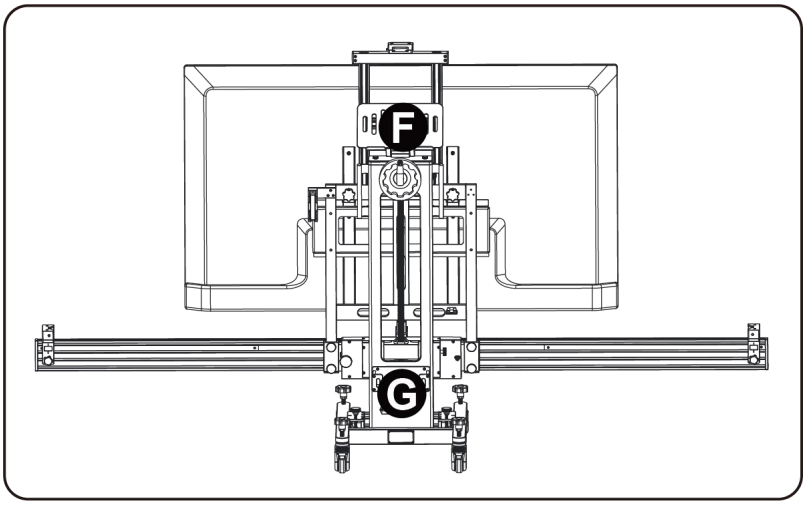

No.	Specific Description
F	**Tablet stand** For holding diagnostic equipment.
G	**Column assembly** Fixed in the middle of the base, it is used to fix the crossbeam and the target stand and to enable equipment height adjustment (supports manual and electric adjustment).

2.2.1 Base Assembly

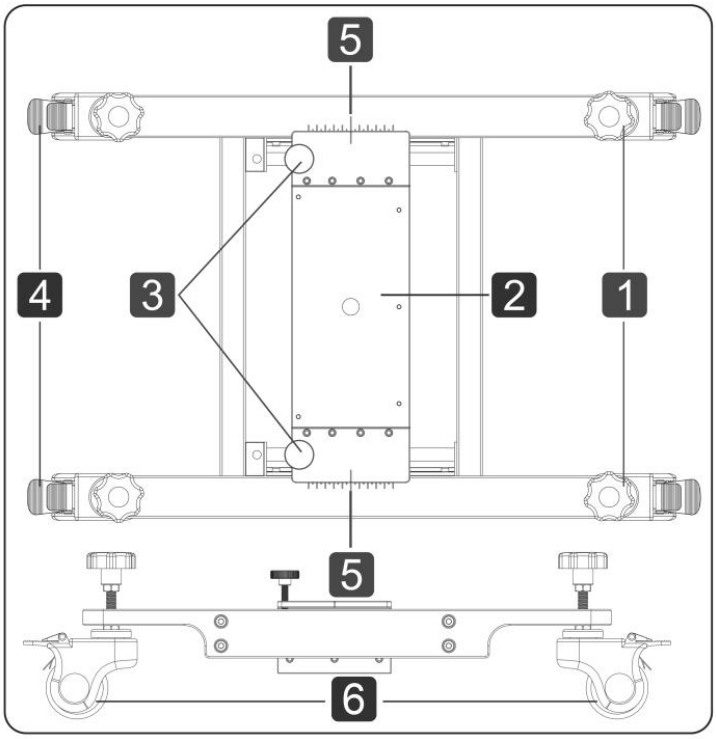

No.	Specific Description
1	**Adjustment knob** For adjusting the level of the equipment.
2	**Column connection plate** Used for mounting fixed columns, can be fine-tuned back and forth.
3	**Forward and backward fine adjustment locking knob** After unlocking the knob, the position can be finely adjusted forwards and backwards.
4	**Brake** Push it down to lock the universal wheel and fix the position of the equipment.
5	**Centering scale line** Used to indicate whether the equipment is centered front to back.
6	**Universal wheel** For moving the calibration equipment.

2.2.2 Column Assembly

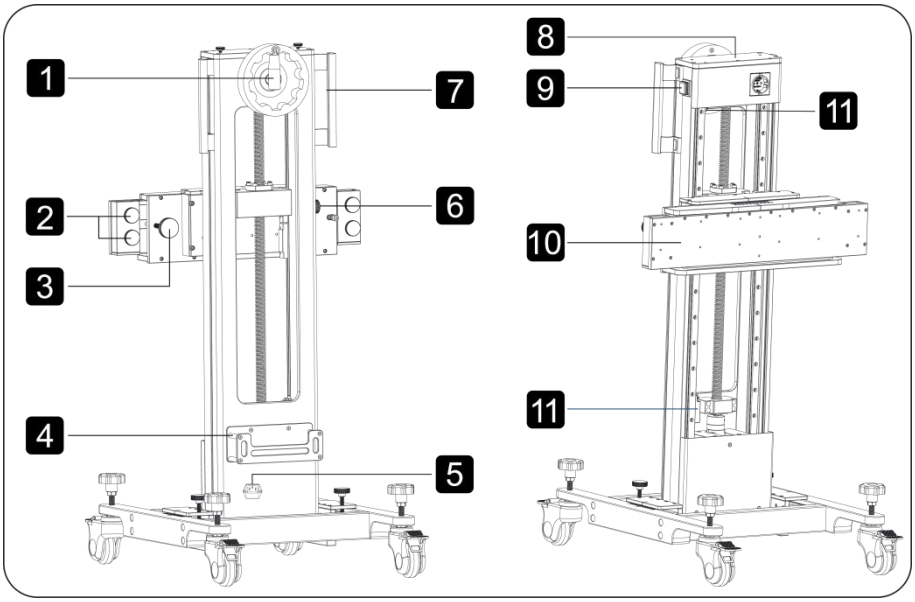

No.	Specific Description	No.	Specific Description
1	**Handwheel** For manually raising and lowering the height of the equipment.	7	**Handle** For easy movement of the equipment.
2	**Fixing knob**	8	**Column top cover**

	For fixing the target holder.		For fixing the tablet stand.
3	**Angle fine adjustment knob** For adjusting the equipment parallel to the vehicle.	9	**Lift Switch** Used to electrically control the lift and lower of the equipment and contains three gears: lift, stop and lower.
4	**Hanger** For holding a mobile power supply or power adapter.	10	**Crossbeam fixing plate** For connecting and fixing the crossbeam.
5	**Power outlet** Used to connect the power supply to power the equipment.	11	**Limit switch** Used to stop lifting when the equipment is electrically lifted to the highest/lowest position. After the limit switch is triggered, no further manual lifting/lowering operation should be enforced to avoid damage to the limit switch and the equipment.
6	**Left and right fine adjustment knobs** Used to adjust the alignment of the equipment with the vehicle.		

2.2.3 Crossbeam Assembly

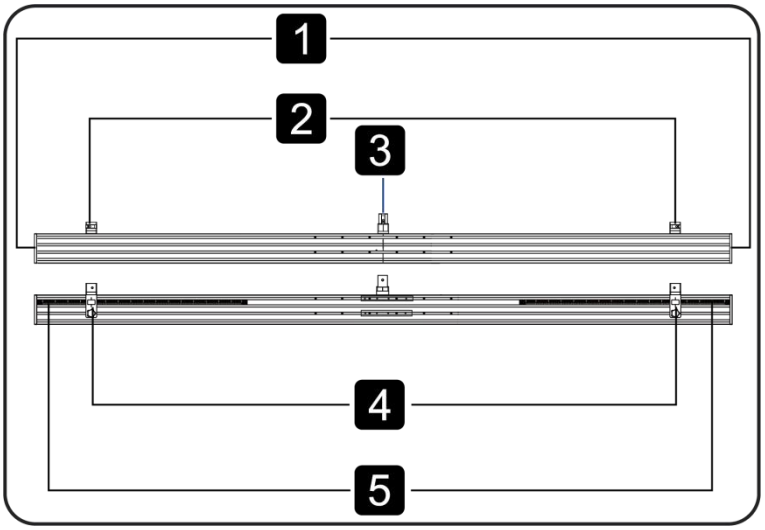

No.	Specific Description
1	**End cap**
2	**Green bluetooth positioning distance meter** For measuring the distance from the equipment to the wheel clamp.
3	**Green bluetooth center distance meter assembly** For measuring the distance from the equipment to the vehicle, to be used with the distance measuring panel.

4	**Positioning distance meter fixing knob** For fixing the distance meter.
5	**Scale** For positioning the physical target (optional) and the distance meter.

2.2.4 Tablet Stand

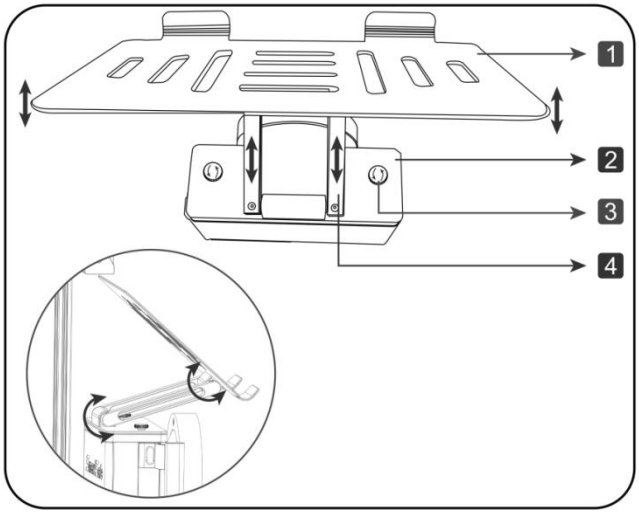

No.	Specific Description
1	**Tray** For holding diagnostic equipment.
2	**Tablet stand base** Used to secure the tablet stand to the column.
3	**Fixing knob** For locking the tablet stand.
4	**Connecting rod** Used to adjust the height and angle of the tablet stand.

*WARNING: Please adjust the position of the tablet stand before raising or lowering the target stand to avoid obstruction of the large screen which may cause damage to the equipment or dropping of items on the tablet stand.

2.2.5 Wheel Clamp Assembly

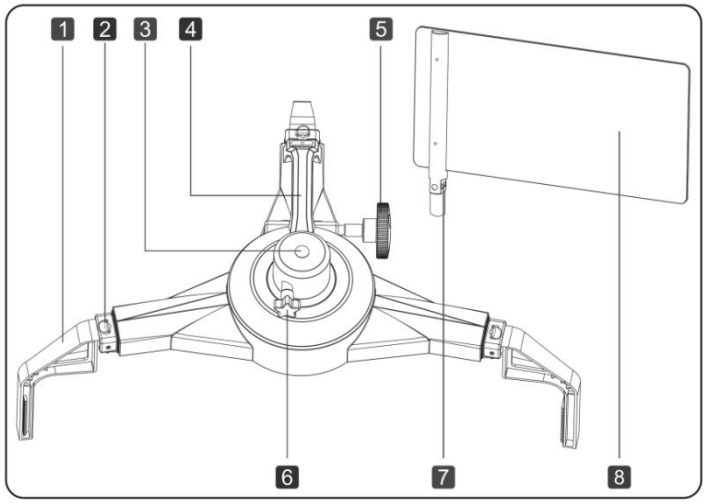

No.	Specific Description
1	**Suspension mount** For attaching wheel clamps to vehicle tires.
2	**Cable switch** Used to adjust the suspension mount mounting slot or to remove the suspension mount from the wheel clamp.
3	**Mounting holes** For mounting the wheel clamp panel.
4	**Handle** For lifting the wheel clamp.
5	**Adjustment knob** Used to adjust the extension of the wheel clamp suspension mount for different size tires.
6	**Fixing knob** For locking the wheel clamp panel in the mounting holes (3).
7	**Wheel clamp panel level bubble** Used to determine if the wheel clamp panel is perpendicular to the vehicle tires.
8	**Wheel clamp panel** Used in conjunction with the positioning distance meter on the crossbeam to measure the distance from the equipment to the wheel clamp.

Note: The wheel clamp provides two types of suspension mount (long and short), users can determine which to choose according to the actual vehicle conditions. Long and short one have the same installation and adjustment method.

2.2.5.1 Installation of the Suspension Mount

1. Pull up the pull cord switch (2) and insert each of the 3 suspension mounts (1) into the wheel clamps, making sure that each suspension mount is installed at the same depth.
2. The two holes in the suspension mounts are used to lock the suspension mounts at the maximum and minimum distance applicable. After the suspension mount is locked, the pull cord switch needs to be activated to re-pull out/insert the suspension mount.

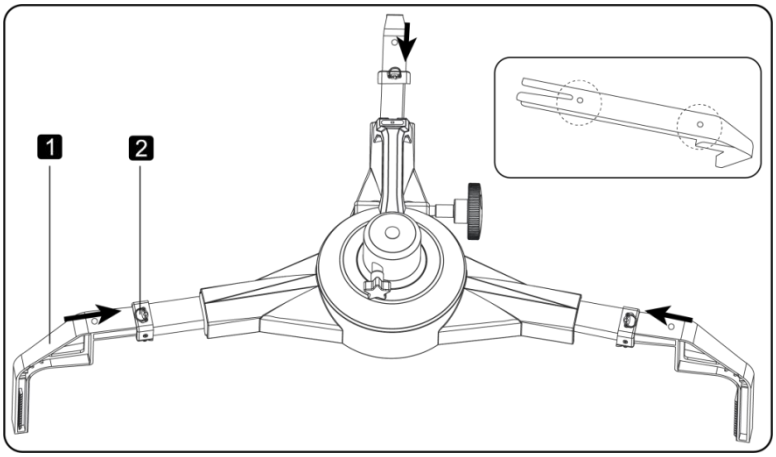

2.2.5.2 Installation of the Wheel Clamp Panel

The steps for installing the wheel clamp panel are as follows (for assembly introductions, please refer to the diagrams in 2.2.5 Wheel Clamp Assembly).

1. Loosen the fixing knob (6).
2. Insert the wheel clamp panel into the mounting holes (3), making sure the wheel clamp panel level bubble (7) is facing up, and tighten the fixing knob (6).
3. Once installation is complete, hold the handle (4) and lay the wheel clamp assembly flat on the ground as the diagram①shown below. When using the short suspension mount, the wheel clamp can be hung on the crossbeam of the calibration equipment as the diagram ② shown below. Please do not position the wheel clamp as the diagram ③ shown below to avoid damaging the components.

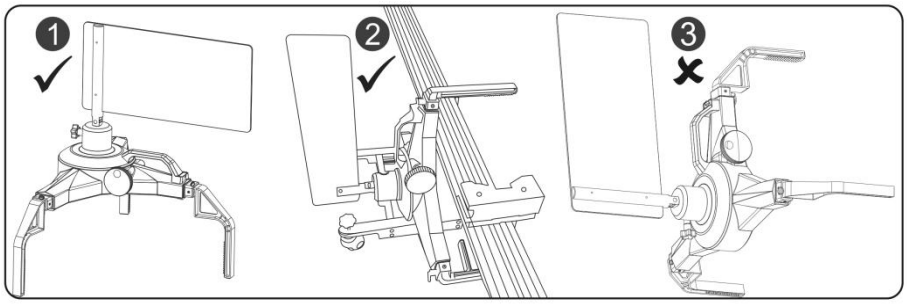

2.2.6 Mid-mounted Laser (LAC09-02)

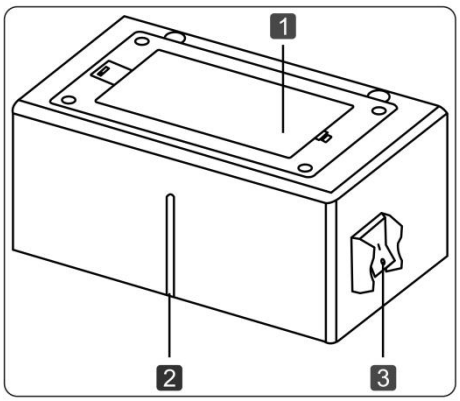

No.	Specific Description
1	**Battery Pack** Used to power the laser. 2 AA (size 5) batteries are required.
2	**Laser line output port**
3	**Switch** It is used to activate or deactivate the laser line of the mid-mounted laser .

2.2.7 Distance Measuring Panel (LAC09-01)

Used with the mid-mounted distance meter assembly to measure the distance between the equipment and the vehicle.

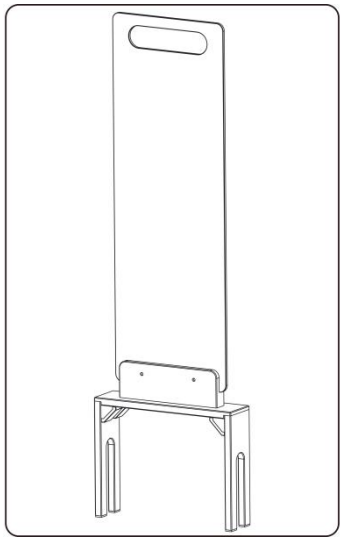

3. Four-wheel Alignment Function

The four-wheel alignment is a wireless 3D wheel aligner with a brand new industrial design form. It is used to detect the relative positions and angles between vehicle wheels in order to determine the wheel alignment parameters. This guides automobile maintenance technicians in adjusting the wheel alignment parameters to meet the requirements of automobile design, ensuring smooth and safe driving, reducing fuel consumption and tire wear.

The wireless 3D wheel aligner is easy to operate, unaffected by the levelness of the platform, and the tilt of the vehicle body will not affect its accuracy. Dynamic measurement is enabled by pushing the vehicle or rolling the wheels, thus improving the efficiency and accuracy of the measurement.

3.1 Precautions in Use

Precautions

- Before installation and commissioning, please read this manual carefully, check the equipment list, and if you have any questions, contact the dealer or Smartsafe immediately.
- The operator must have a basic understanding of four-wheel alignment.
- The operator must have knowledge of the safe use of lifts and the safe maintenance of vehicles.
- After the vehicle maintenance is completed, all loosened bolts and components need to be checked and tightened as required to ensure safety.
- Do not install the wireless 3D wheel aligner on a vibrating object or a tilted surface. Avoid direct sunlight and moisture.
- Unauthorized disassembly of the equipment is prohibited to prevent component damage, affect inspection, and increase difficulty and cost of maintenance. For damages caused by unauthorized disassembly, the company will not provide any warranty.
- The camera of the wireless 3D wheel aligner is a key optical component for inspection and needs to be kept clean.

Safety Information

Do not operate the four-wheel alignment system in a flammable and explosive environment.

It is strictly prohibited to place any flammable or spontaneously combustible materials (such as cloths contaminated with machine oil and cloths contaminated with flammable solvents) next to the equipment.

Place the equipment away from fire sources, and also place appropriate fire extinguishers next to the equipment.

Do not look directly at the laser emission! Avoid exposing the eyes or skin to direct or scattered radiation.

3.2 Preparations

3.2.1 Device Activation

When using wireless 3D wheel aligner for the first time, it is necessary to activate the device on the inspection tablet (ST13 intelligent link terminal).

Note: Before activating the device, ensure that the wireless 3D wheel aligner is in a normal startup state, and that the tablet (ST13 intelligent link terminal) is in a connection attempt state (i.e., the measurement unit is in a flashing blue light state).

1) Enter the main interface of the four-wheel alignment measurement program by clicking on the [Four-Wheel Alignment] application on the tablet.

2) Click the [Four-Wheel Alignment] icon on the main interface to enter the device activation interface, select the device, and click [Activate].

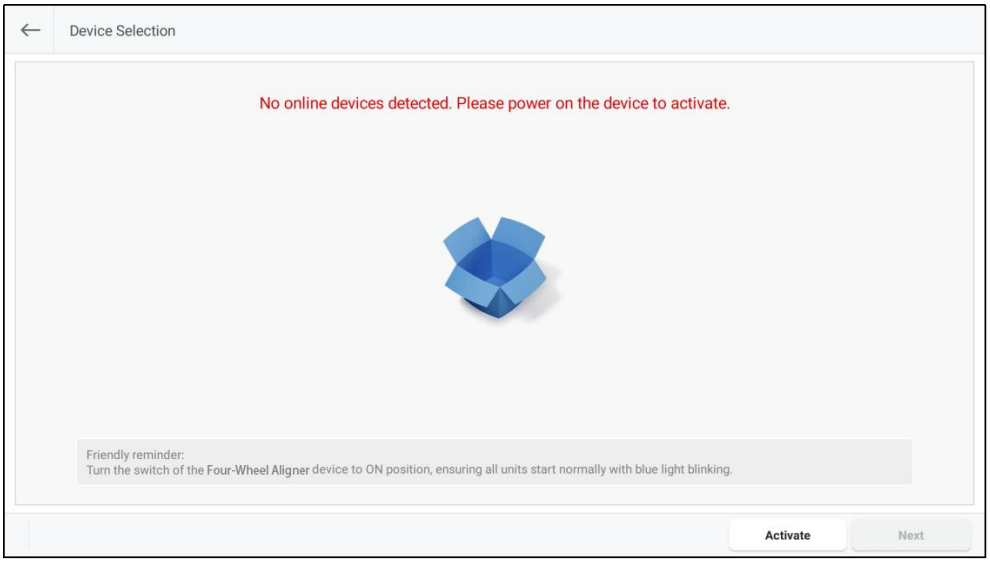

3) Enter the serial number and activation code for wireless 3D wheel aligner, then click [Activate].

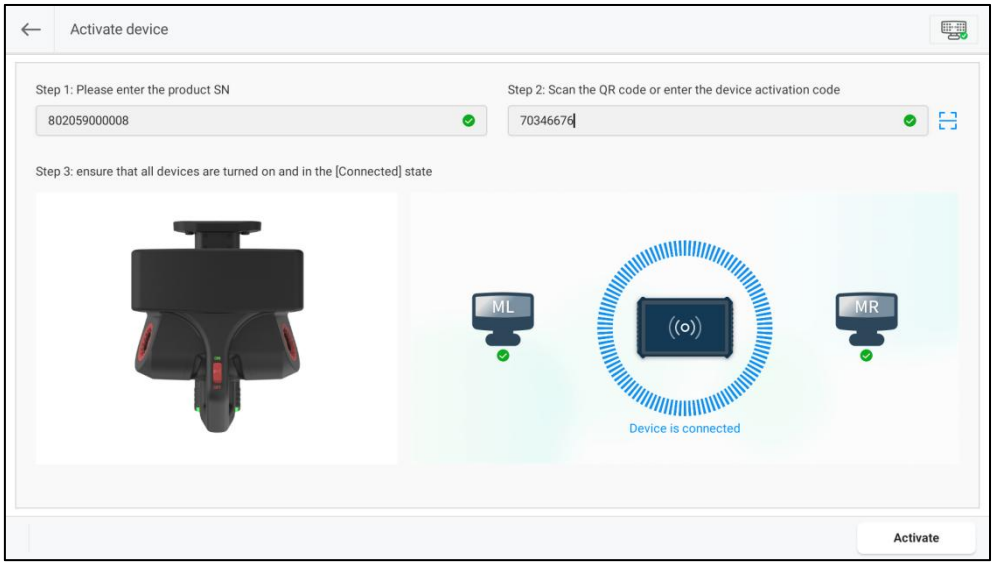

Note: you can click to scan the device activation code (QR code).

4) Activation is successful.

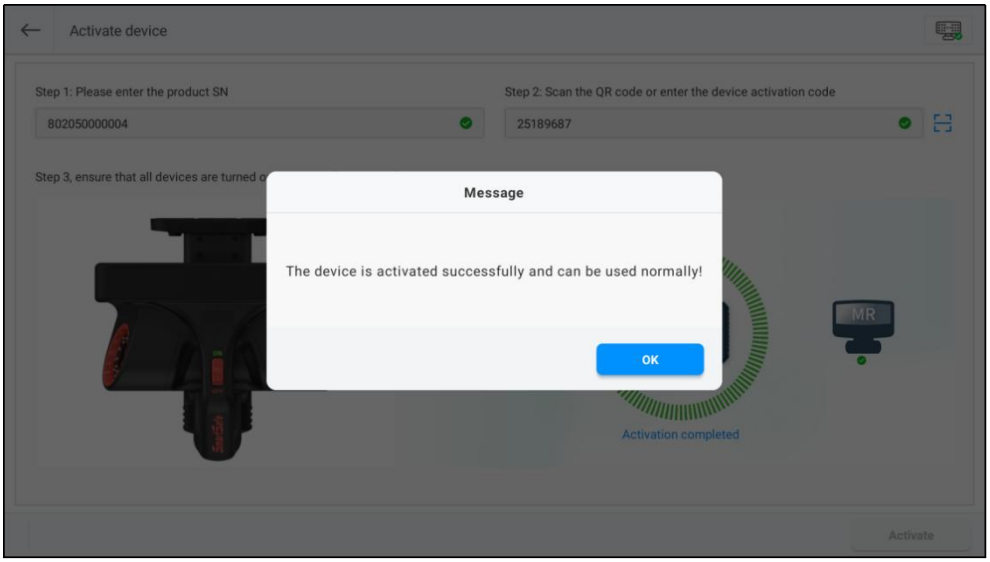

5) Select the device and click [Next].

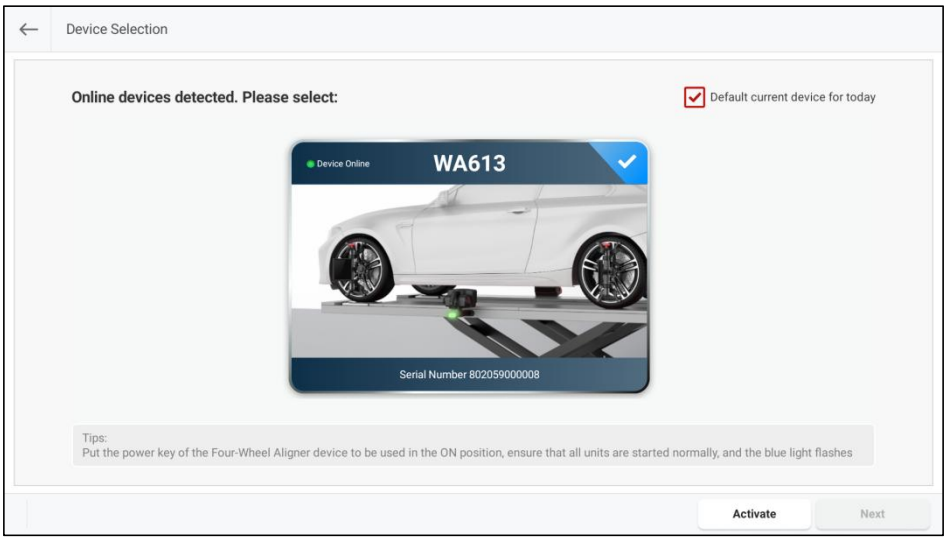

3.2.2 Use of Positioning Sticker

The product comes with positioning stickers to assist in the installation of the device. Attach the positioning sticker about 1cm away from the surface of the lift and ensure that the positioning surface is parallel to the surface of the lift.

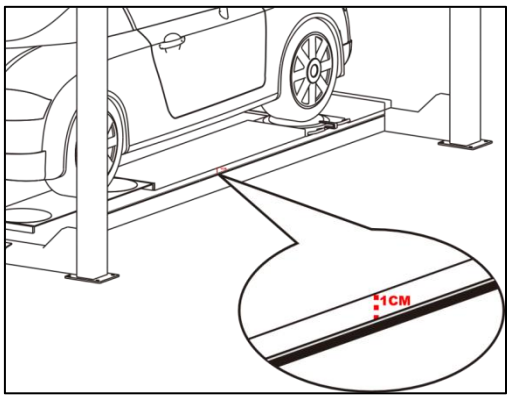

3.3 Routine Inspection

Enter the main interface of the four-wheel alignment measurement program by clicking on the [Four-Wheel Alignment] application on the tablet. The main interface displays 6 functions: four-wheel alignment, quick inspection, inspection records, database, device management, and system settings.

3.3.1 Car Selection

Click the [Four-wheel Alignment] icon on the main interface to enter the routine four-wheel alignment inspection interface, and first select the car.

According to the information of the car to be detected, select the [Region] -> [Brand] -> [Year] -> [Model] -> [Configuration] in order, and then enter the [Car info] interface.

Note: You can enter relevant information in the search box at the top of the screen for quick search.

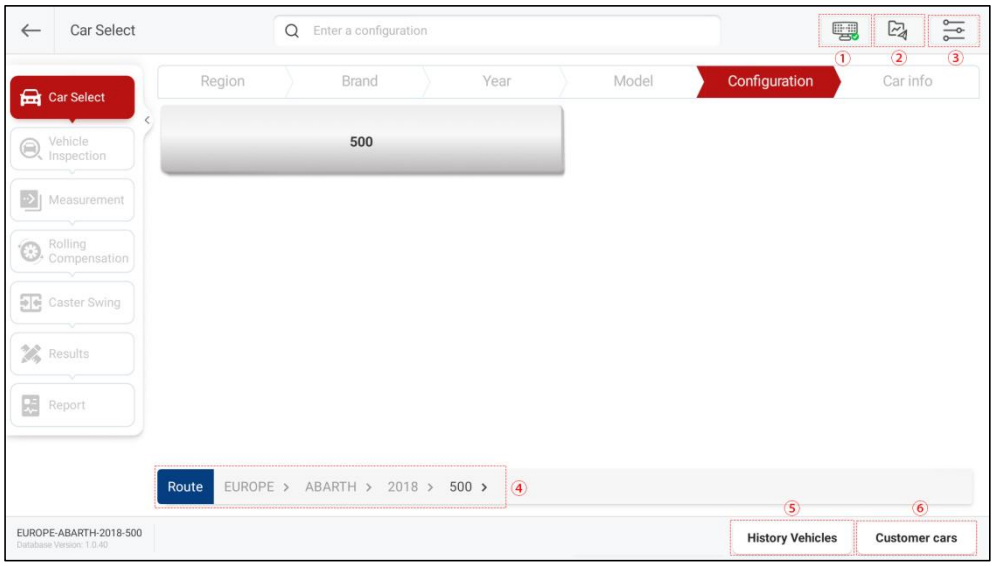

Screen button instructions are as follows:

① **Device status ( )**	Clicking this button allows you to quickly view device status, battery level, network connection signal, and other information (when all devices are online, the icon is displayed in green ; when there is a low battery

	level, the icon is displayed in red ; when there is an device status abnormality or malfunction, the icon is displayed in orange ; when some devices are online or in the process of connecting, the icon is displayed in blue). 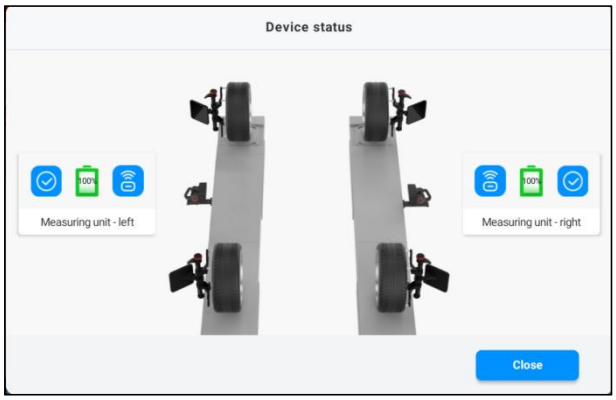
② **Feedback**	Feedback
③ **Parameter settings** ()	Clicking this button allows you to quickly enter the "Parameter Settings" interface.
④ **Path**	Reflects the selected car's region, brand, model, year, and configuration information.
⑤ **History Vehicles**	Used to directly select previously detected cars based on historical inspection records.
⑥ **Customer cars**	To view the saved customer cars information for directly selecting the cars.

In the “cars” interface, you can view the standard data of the vehicle, and you can also modify the configuration and add custom data as needed.

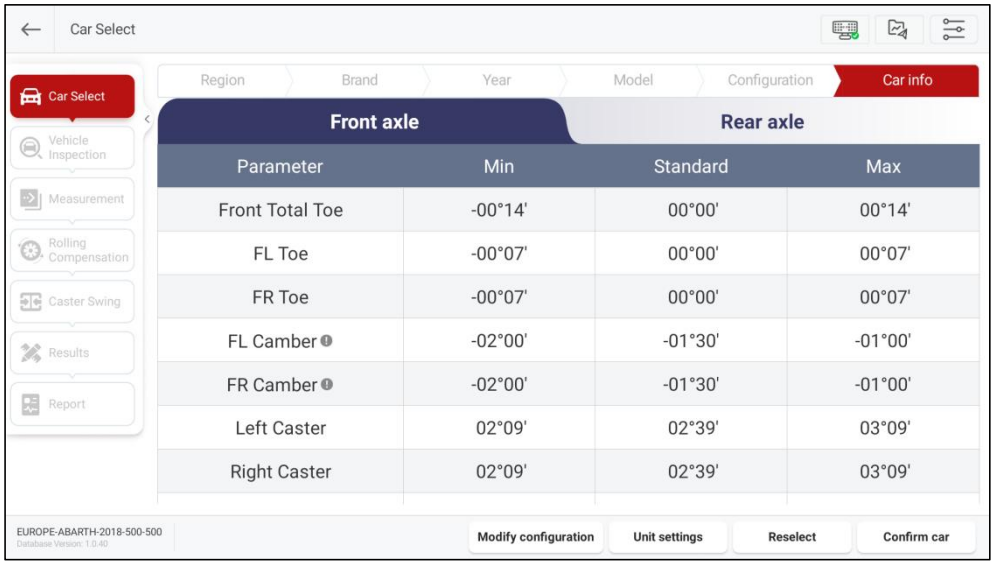

Screen button instructions are as follows:

[Modify Configuration]

This function is used to customize the configuration information. Click [Modify Configuration] to enter the following interface:

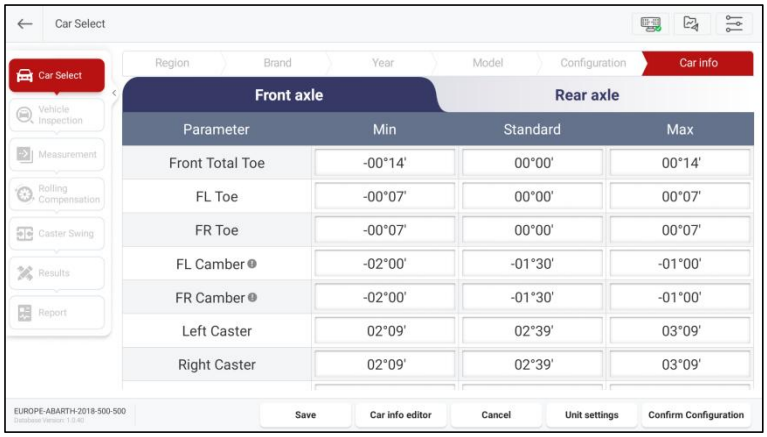

After modifying the parameter value, click [Save Current Configuration]. In the pop-up window, enter the configuration name and click [OK] to save the modified configuration to the custom database.

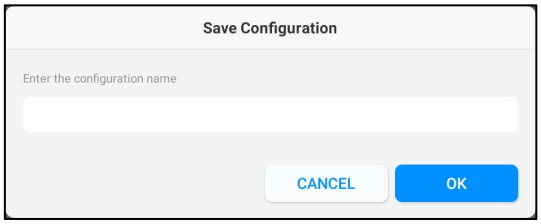

If you need to modify the model information of custom data, you can click [Model Edit] to modify the corresponding information and then click [Save Current Configuration].

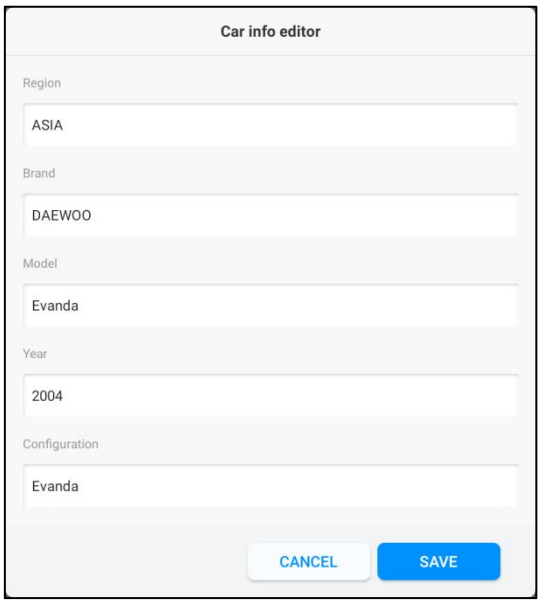

[Cancel Edit]: Cancel editing and return to the car information confirmation interface.

	[Confirm Configuration]: Confirm that the configuration has been modified and return to the car information confirmation interface.
[Unit Settings]	This function is used to modify the units of toe-in, angle, car height, track width, and wheelbase, etc. 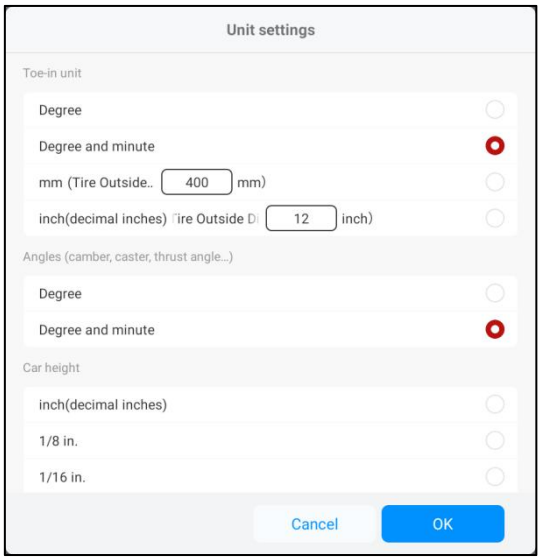
[Reselect]	Select a car again according to [Region] -> [Brand] -> [Model] -> [Year] -> [Configuration].
[Confirm car]	Confirm car information and enter the car inspection interface.

3.3.2 Vehicle Inspection

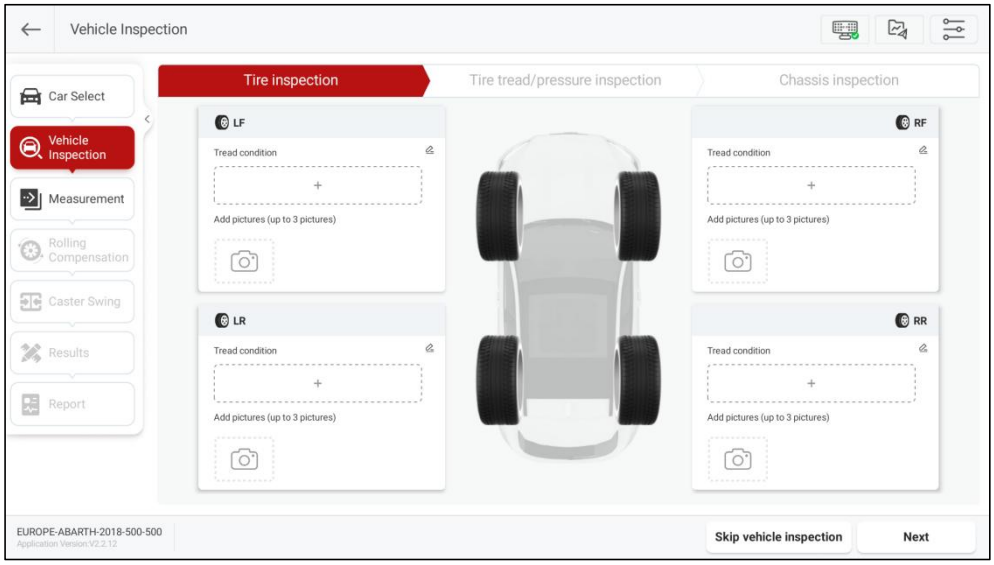

Complete relevant vehicle inspections such as the vehicle tire inspection, tread and tire pressure inspection, and chassis inspection, then click [Next] to enter the measurement preparation interface. You can click [Skip Vehicle Inspection] and enter the measurement preparation interface without the need for a vehicle inspection.

3.3.2.1 Tire Inspection

After checking the tread condition, click the [+] button, select the tread condition options for each tire in the pop-up window, and you can attach the corresponding reference photos (up to 3). After completing the tire inspection, click [Next] to enter the “Tread and Tire Pressure Inspection” interface.

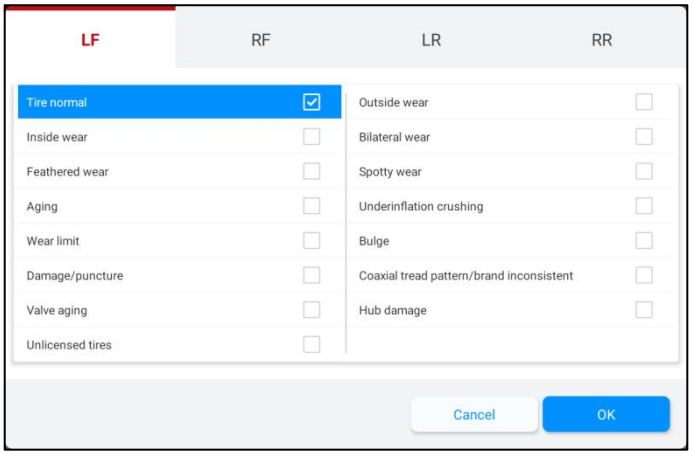

3.3.2.2 Tire Tread/Pressure Inspection

After completing the tread and tire pressure inspection, click the corresponding input box on this interface to enter the inspection value. Under the “Tread Depth” option, you can click [+] or [-] to increase or decrease the input box to correspond to the number of grooves for different types of tires (2 to 5).

Here, you can click the [Tread detection Tool] to connect to the corresponding tread detector (purchased separately) for tread inspection.

After completing the tread and tire pressure inspection, click [Next] to enter the “Chassis Inspection” interface.

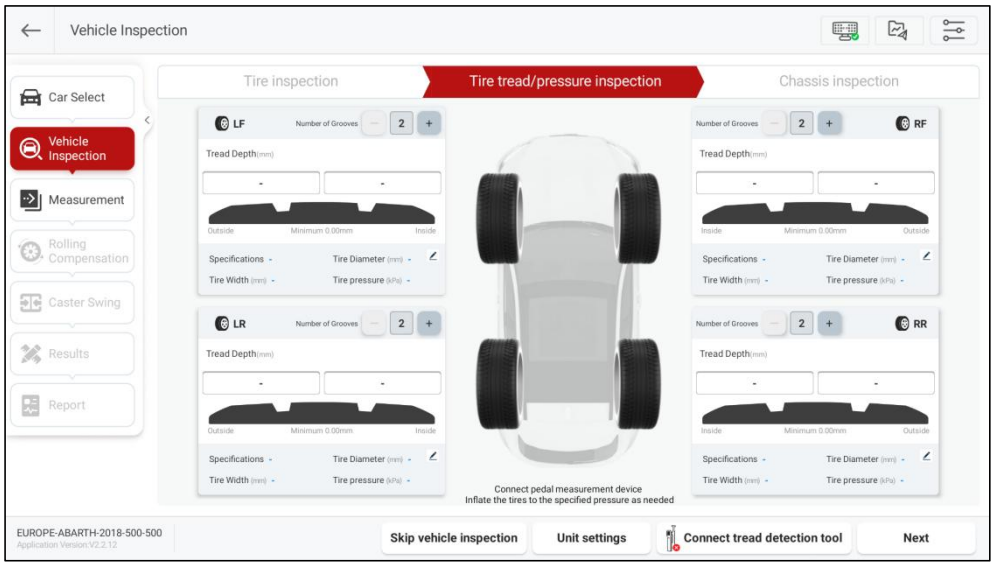

3.3.2.3 Chassis Inspection

Follow the on-screen prompts to check the chassis of the car and add relevant photos (up to 5) and notes, and click the corresponding options to mark the status of each component (normal/warning/repair). After completing the chassis inspection, click [Next] to enter the Measurement Preparation Interface.

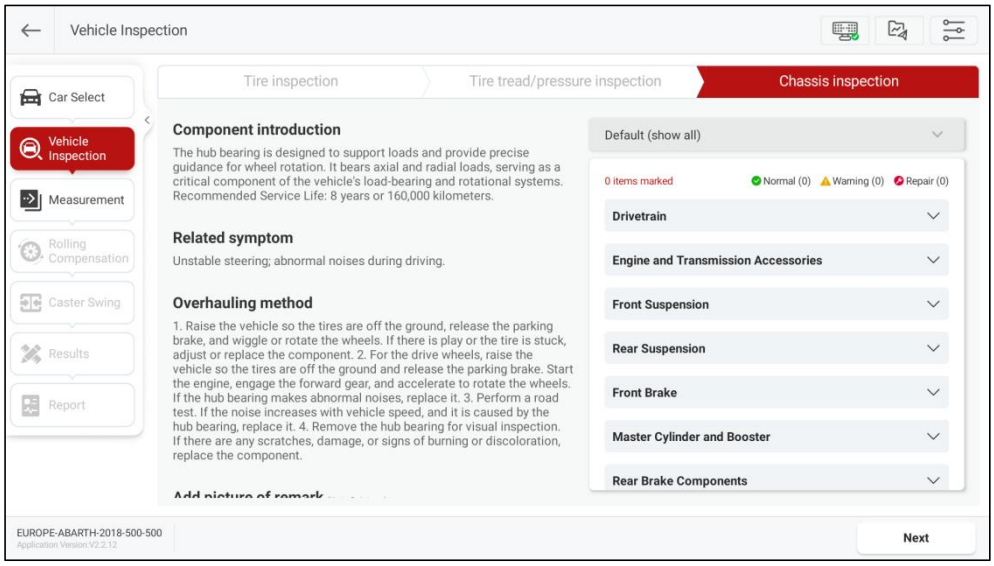

3.3.3 Measurement Preparation

Install the fixture and device according to the screen instructions, and then perform measurement scanning.

3.3.3.1 Fixture Installation

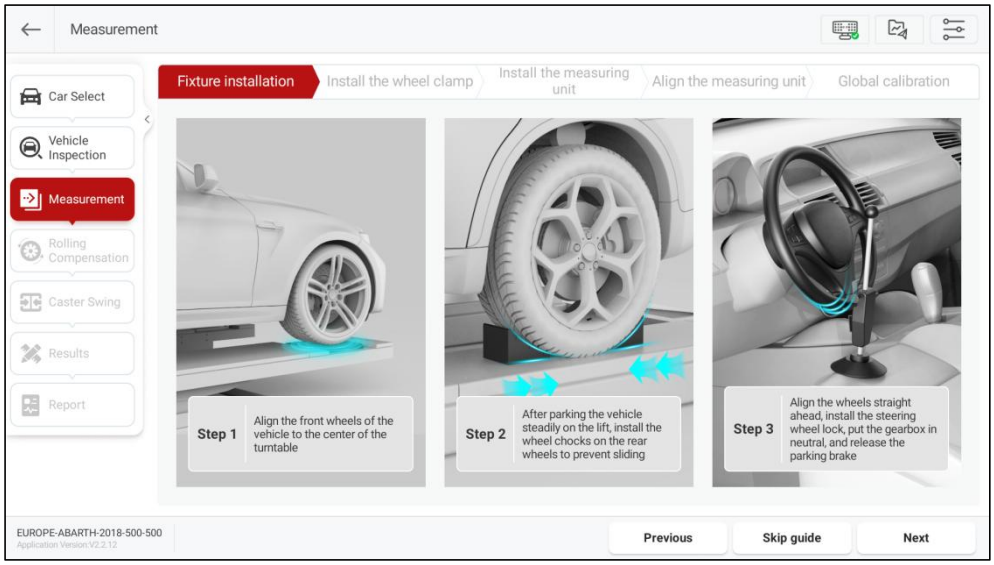

Click [Fixture Installation] and install the relevant fixtures according to the on-screen instructions.

1) Align the front wheels of the vehicle to the center of the turntable.
2) After parking the vehicle steadily on the lift, install the wheel chocks on the rear wheels to prevent sliding.
3) Align the wheels straight ahead, install the steering wheel lock, put the gearbox in neutral, and release

the parking brake.

3.3.3.2 Device Installation

After the fixture installation is complete, click [Next] to enter the device installation guide interface and install the relevant device according to the on-screen instructions.

Note: It is recommended to install the product's matching positioning stickers on the side of the lift bridge in advance to assist with device installation.

1) Clamp installation

Please align the clamps with the center of the tires, according to the diagram, clamp the 4 clamping jaws of the clamp onto the metal edge of the wheel rim, and orient the patterned side of the target towards the center (measurement unit).

Note: The clamps must be vertical to the ground, with an allowable error range of -15° to 15°.

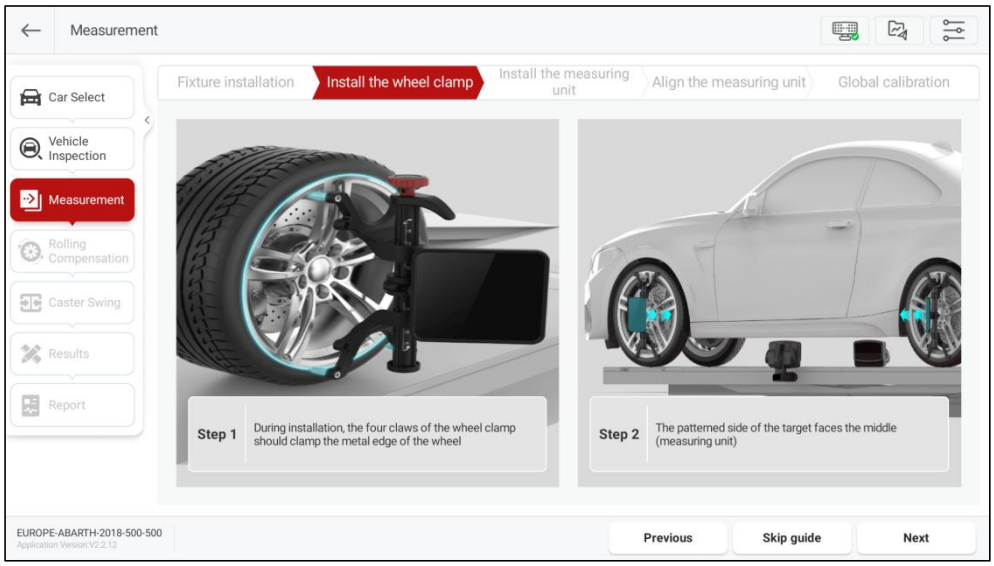

2) Measurement unit installation

Please install the measurement unit between the front and rear clamps, and attach the magnetic surface from top to bottom on the side of the lift bridge.

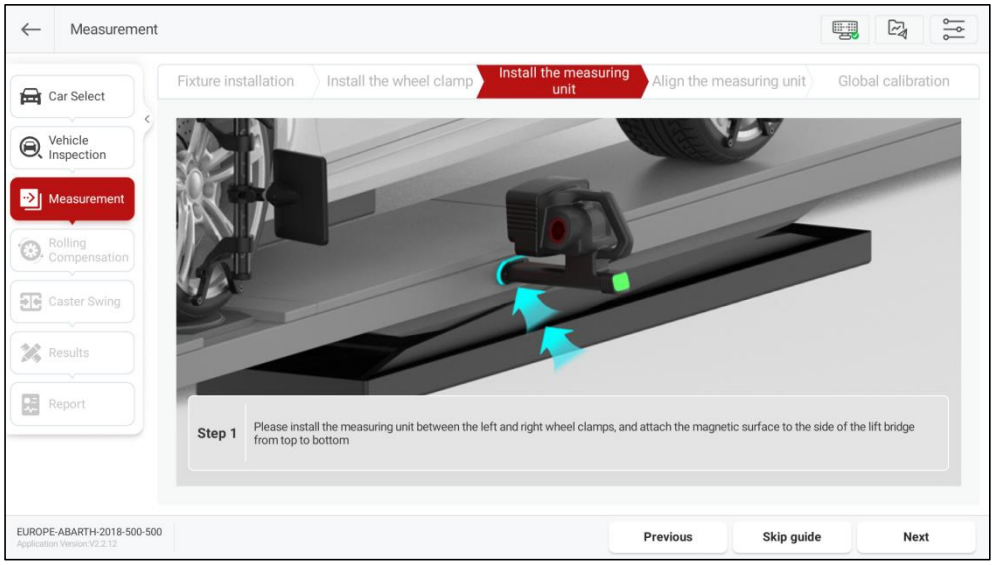

3) Measurement unit alignment.

To ensure that the two measurement units are aligned with each other, visually check that one unit is on the same longitudinal axis as the opposite one.

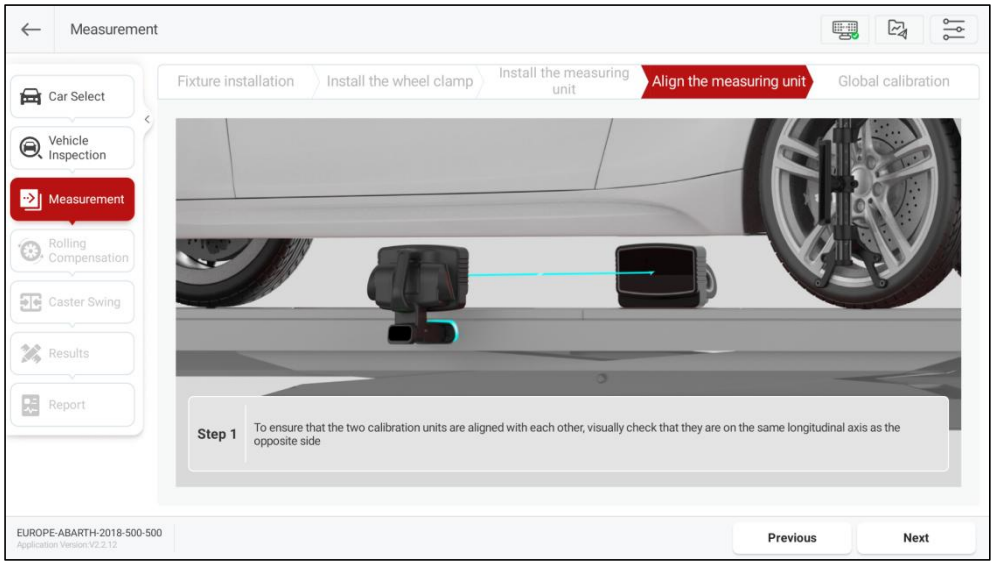

After the clamps and measurement units are all installed, the indicator lights on the measurement units flash blue quickly, indicating that the measurement units are searching for the ST13 intelligent link terminal. The indicator lights then flash blue slowly, which indicates the device is networking internally. When both measurement units are successfully connected to the tablet, the indicator lights will be steady on green.

3.3.3.3 Global Calibration

After the device is installed, click [Next] to enter the global calibration interface.

After confirming that both measurement unit icons show “Connected”, click [Start Calibration].

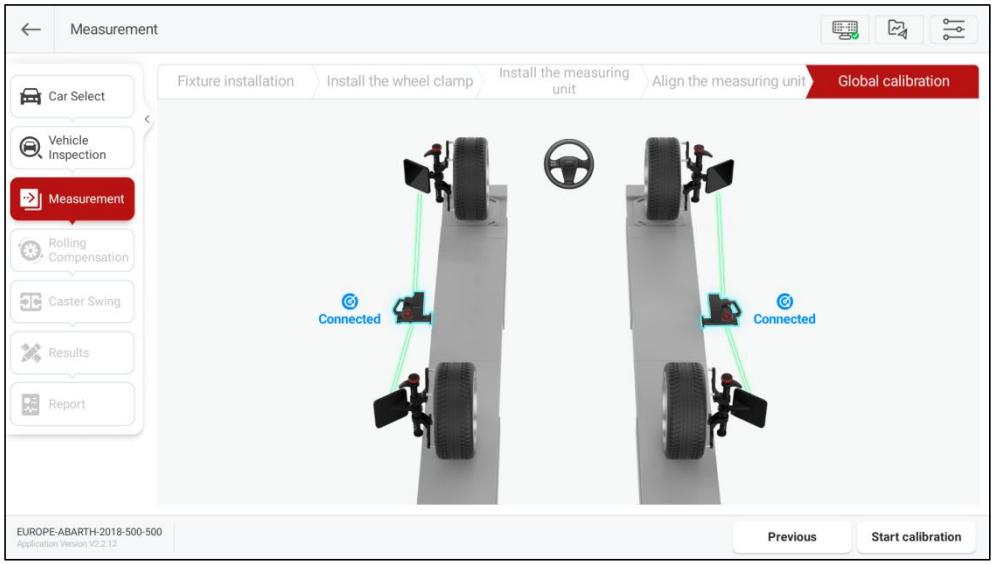

After calibration is complete, the measurement unit and target icons display “Ready”.

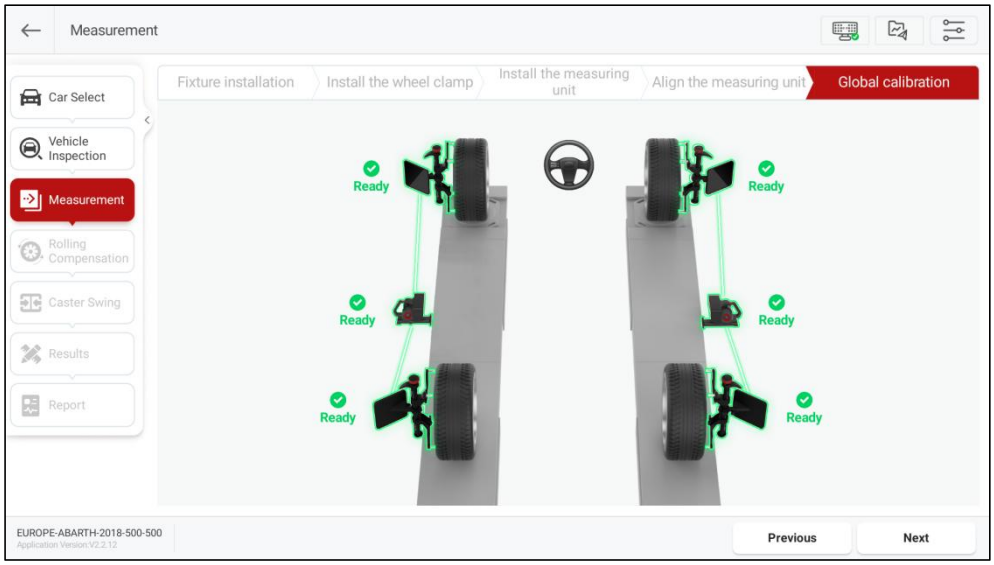

After the device installation is complete, click [Next] to enter the “Rolling Compensation” interface, and push the vehicle according to the prompts on the interface and complete the rolling compensation.

3.3.4 Rolling Compensation

The rolling compensation operation is as follows:

1) According to the interface prompt, first slowly push the vehicle backward until all the pointers stay in the green zone, as shown in the figure below.

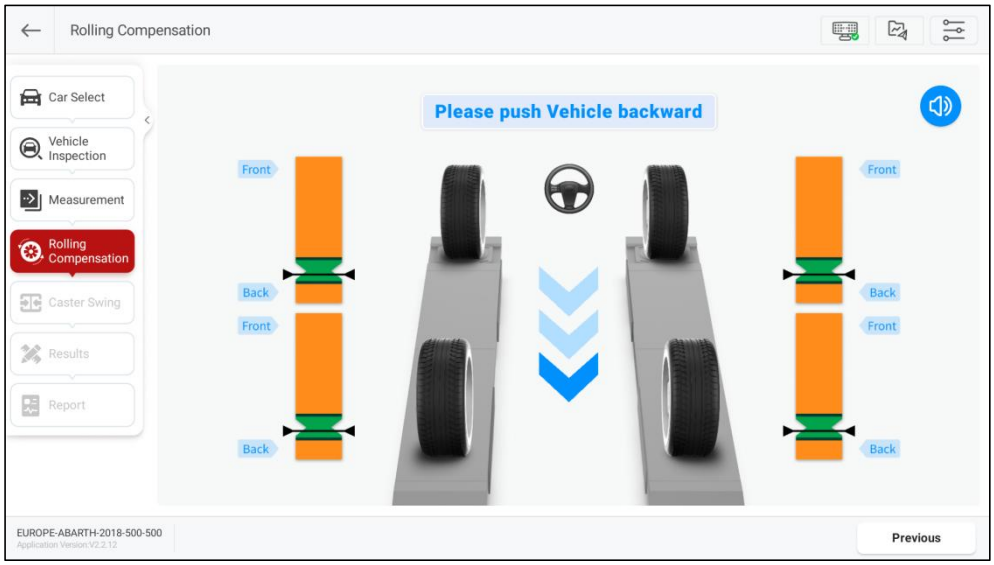

2) When the interface prompts “Please push car forward”, slowly push the car forward until all pointers stay again in the green zone.

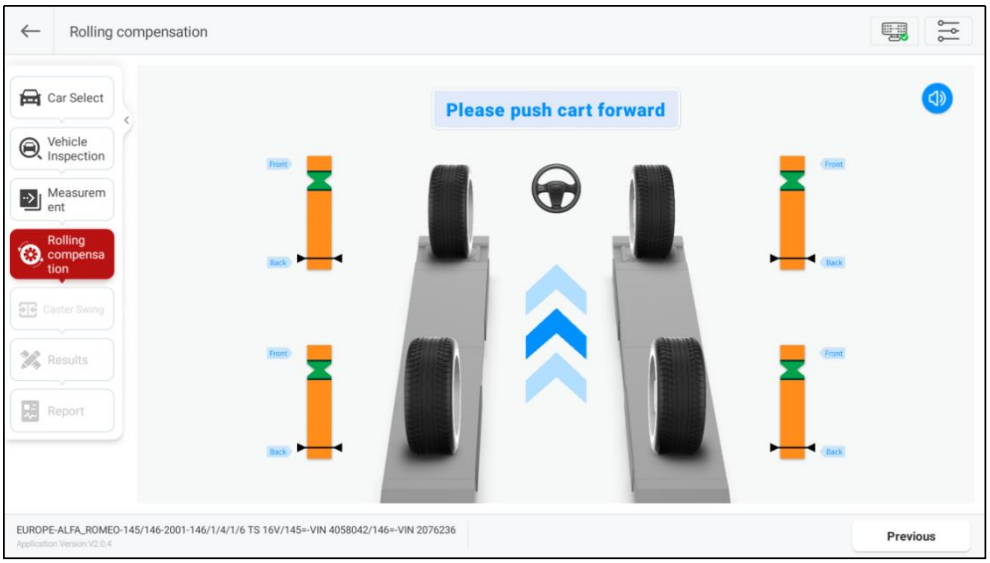

When the interface prompts “Rolling compensation completed”, the rolling compensation is complete and it automatically enters the “Measurement Results” interface.

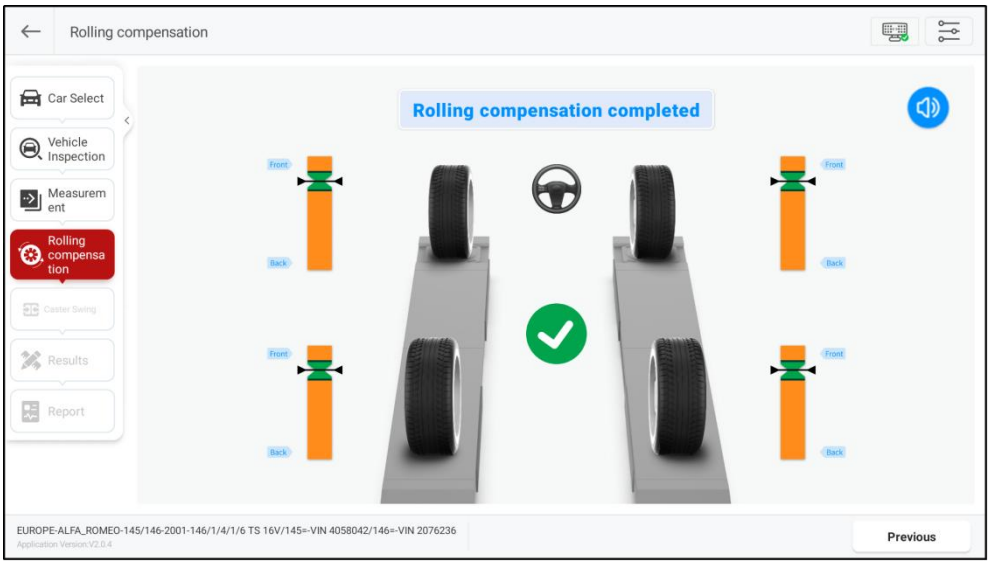

3.3.5 Caster Swing

The caster measurement is for the front wheels, including the kingpin inclination and the kingpin caster. The caster inclination angle can make the weight of the car evenly distributed over the bearings, protect the bearings from damage, and make the steering force even and the steering light. The presence of kingpin caster angle allows the steering axis to meet the road surface in front of the tire's grounding point, allowing the car to keep straight by using the resistance of the road surface to the tires.

3.3.5.1 Preparations

Prepare the following according to the on-screen prompts:

(1) Remove the steering wheel lock.

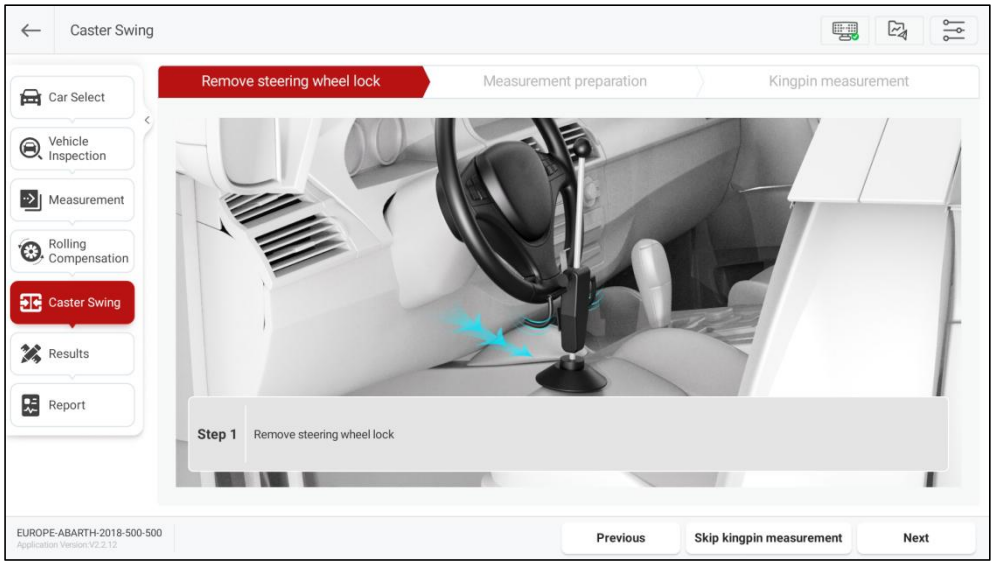

(2) Measurement preparation

1) Install the brake lock.
2) Remove the turntable pins.
3) Remove the side slip plate pins.

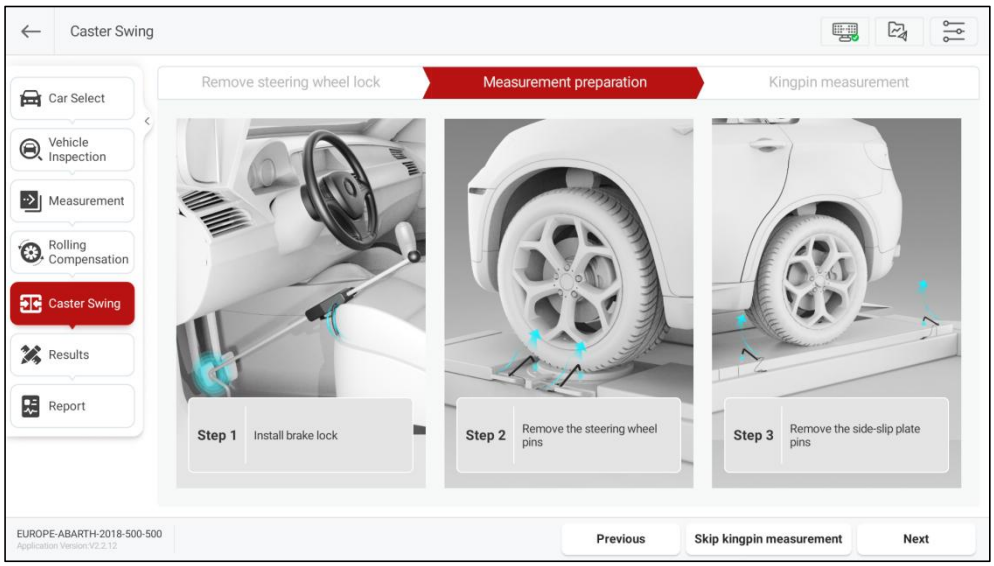

After the preparation is completed, click [Next] to enter the “Kingpin Measurement” interface.

3.3.5.2 Kingpin Measurement

1) Adjust the steering wheel to the straight-ahead position, that is, the two front wheels have equal toe-in.

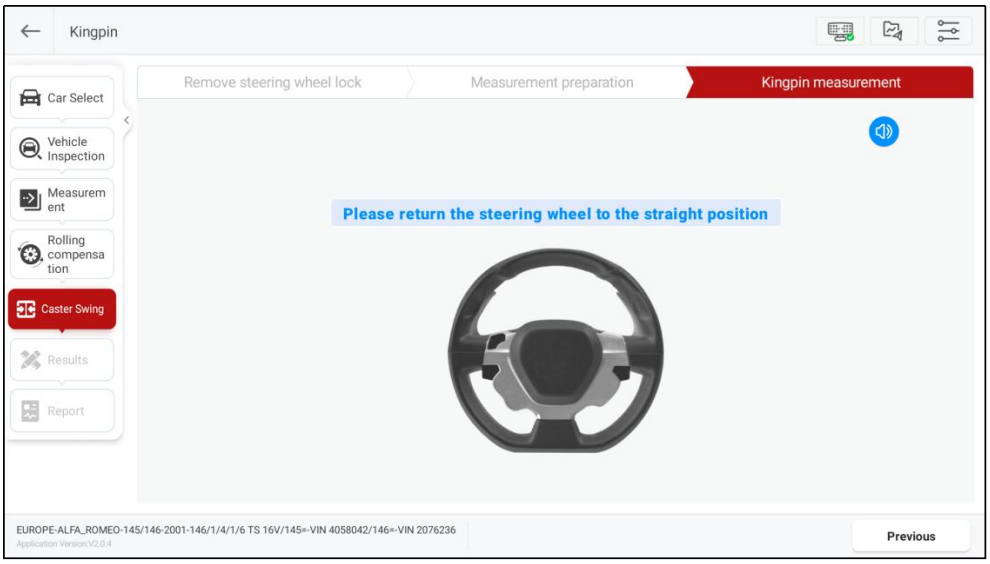

2) According to the system prompt, turn the steering wheel left or right (slowly and steadily turn the steering wheel), and when the wheel angle reaches or exceeds the set angle (12°), the system prompts to turn the steering wheel in the opposite direction.

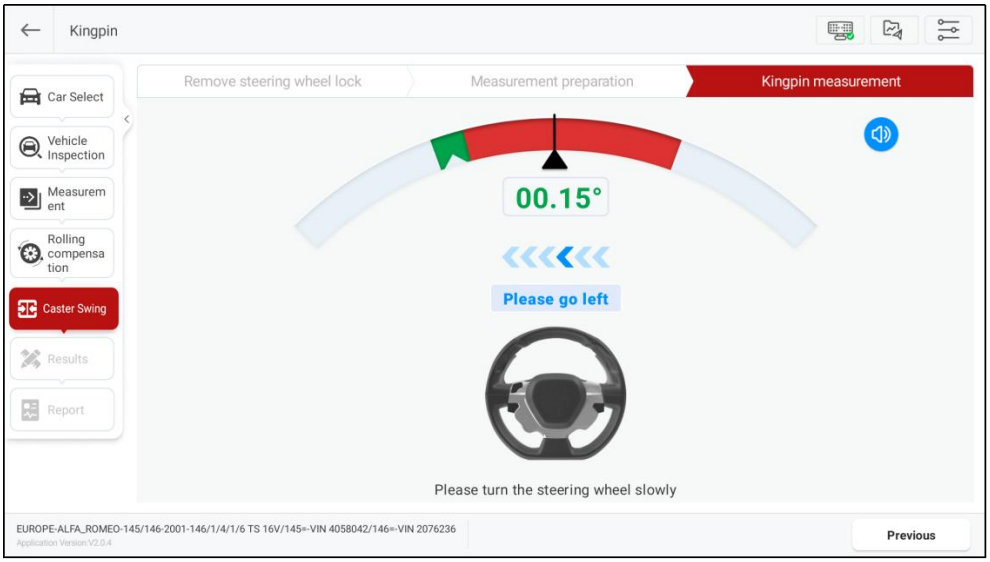

3) According to the interface prompt, slowly and steadily turn the steering wheel. When the wheel angle reaches or exceeds the set angle (12°), the system prompts to straighten the steering wheel.

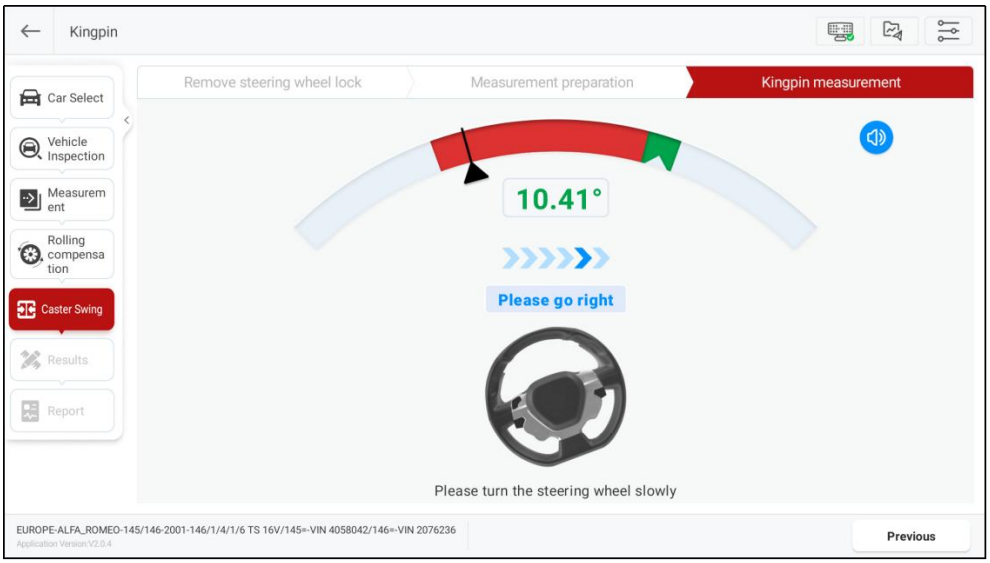

4) According to the system prompt, return the steering wheel to its initial position.

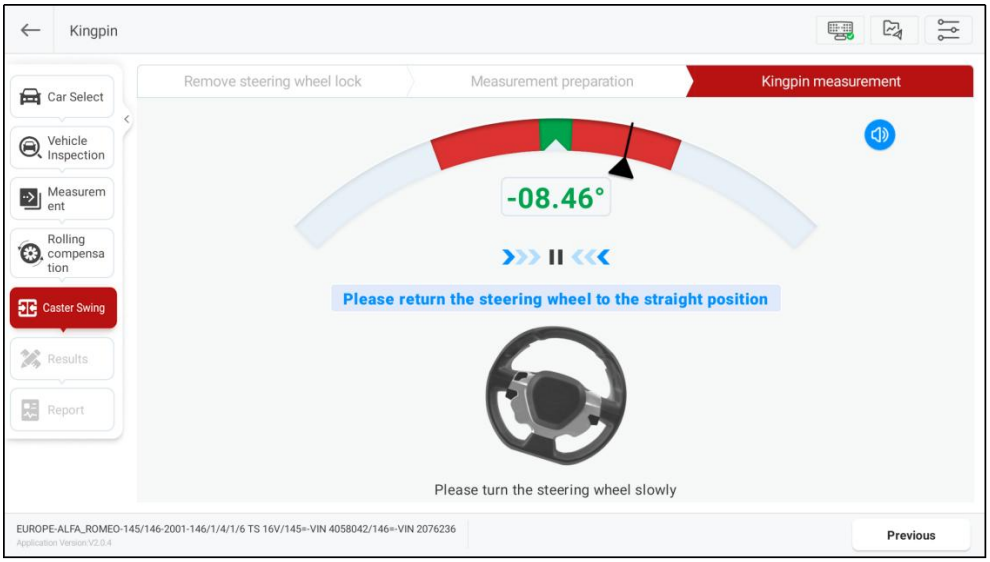

After the kingpin measurement is completed, switch to the “Measurement Results” interface.

Note: If you need to adjust the chassis, and the lift has shaking or is lifting, please click the [ ] button to perform “Global Calibration” to ensure that the height of the two bridges of the lift is consistent.

3.3.6 Measurement Results

This function is used to view and save measurement results. To view the separate measurement results for Kingpin, “Rear Axle”, “Front Axle”, "All Measurements" and “Symmetry”, please click the corresponding buttons at the top of the screen to view them respectively.

Icon	Description
	Device Status Be used to view the device status. You can view the network connection status between the measuring unit and the detection tablet, the power level of the measuring unit, and the network signal strength of the measuring unit.
	Freeze the data
	Unfreeze the data.
	Global calibration
	Feedback
	Roll compensation.
	Enter system settings.
	Some test results provide maintenance instructions, which can be viewed by clicking the icon next to the test result.

Save current value before repair: Before maintenance, please click [Save current value before repair], the measurement results will be updated in real time after the completion of maintenance.

Kingpin Adjustment: if the measurement results of "Caster" display abnormally, user can click [Caster Adjustment] to enter the calibration mode, and click [Caster Adjustment] to exit the calibration mode when

the calibration is completed.

Click [Next] to save the current measurement results and enter the "Report" interface.

3.3.7 Inspection Report

This function is used to view, save, and share the inspection reports. On the right side of the screen, you can click to view the inspection reports for four-wheel alignment, before and after maintenance, before maintenance, current values, symmetrical values, tire inspection, chassis inspection, and more.

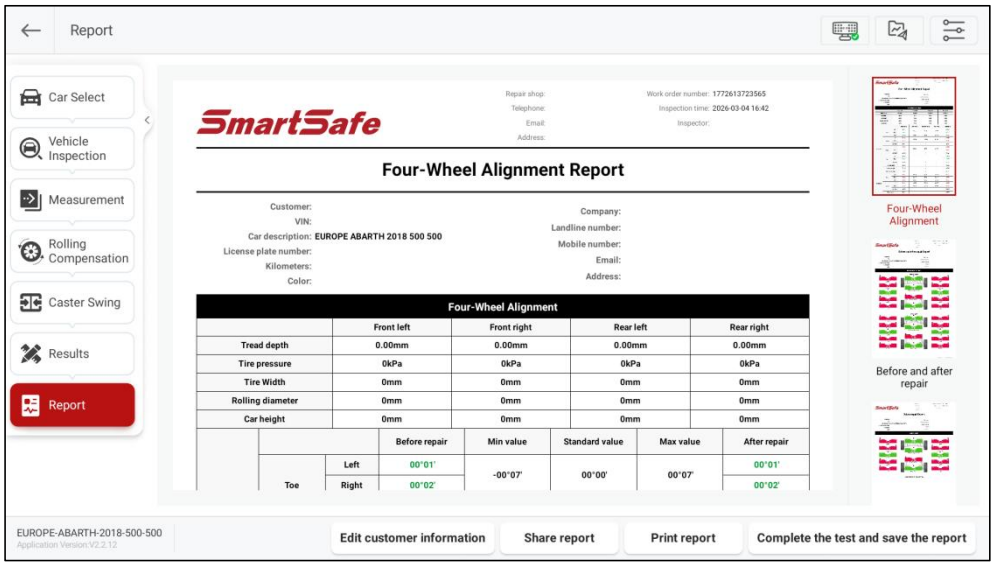

Screen button instructions are as follows:

[Edit Customer Information]	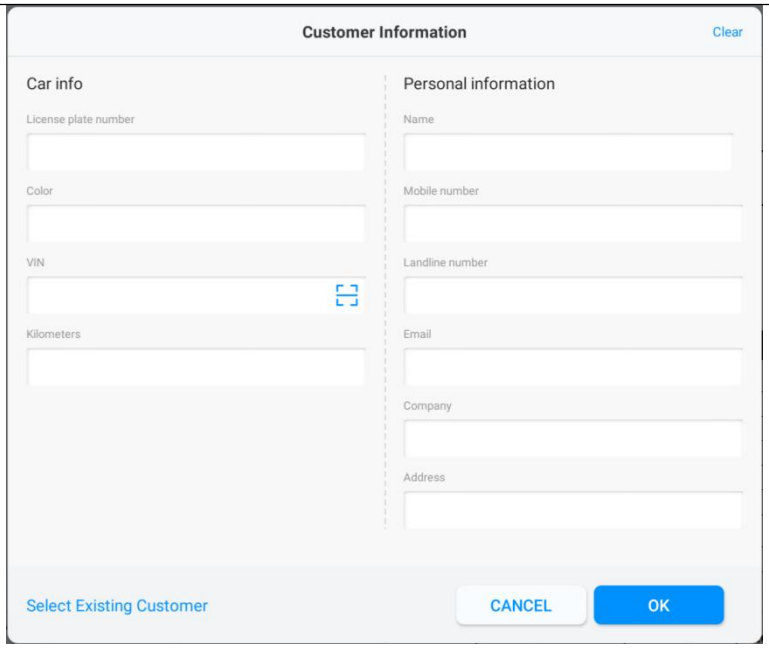 ● Add Customer Information: Users can add customer information. The new customer information will be synchronized to the [System Settings] > [Customer Information] interface. ● Select Existing Customer Information: Users can click [Select Existing Customer] to select customer information already saved in the system. Note: If you need to update a customer's information, in the

	Select Customer Information interface, you can click the button at the top right of the customer card to modify. The updated customer information will be synchronized to the [System Settings] > [Customer Information] interface. You can also edit it directly on the [System Settings] > [Customer Information] interface.
[Share Report]	The inspection report can be shared via QR code or email. 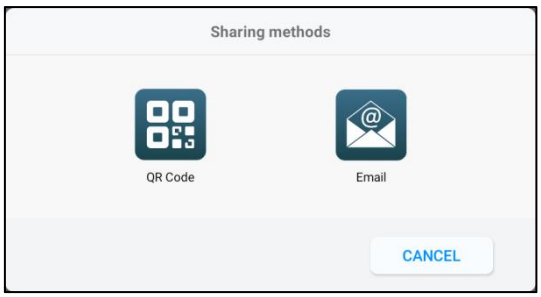
[Print Report]	You can print the current inspection report or select “Save as PDF” in the upper left corner of the pop-up to save the report as a PDF document. 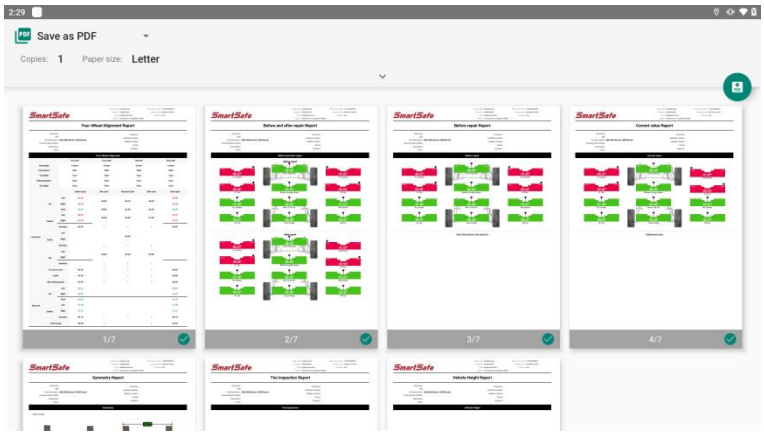
[Test and save the report]	Save the inspection report on the ST13 intelligent link terminal, and you can click [Inspection Records] on the main interface to query and manage all saved inspection reports.
[ADAS Calibration]	Click “ADAS Calibration” button to start ADAS calibration.

3.4 Quick Inspection

Quick inspection does not include vehicle selection and vehicle inspection steps, and does not perform kingpin measurement. If you need to operate all measurement functions, please select [Four-wheel Alignment] for routine inspection.

3.4.1 Measurement Preparation

Click [Quick Inspection] on the main interface to enter the following screen:

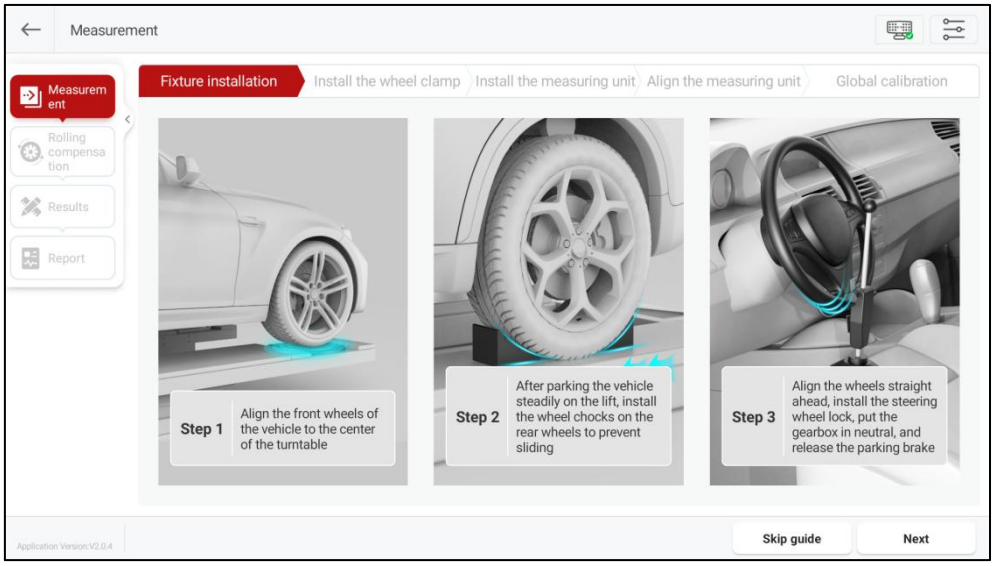

Follow the on-screen instructions to complete the steps such as fixture installation, clamp installation, measurement unit installation, measurement unit alignment, and global calibration. After completing the measurement preparation, click [Next] to enter the “Rolling Compensation” interface.

3.4.2 Rolling Compensation

The rolling compensation operation is as follows:

1) According to the interface prompt, first slowly push the vehicle backward until all the pointers stay in the green zone, as shown in the figure below.

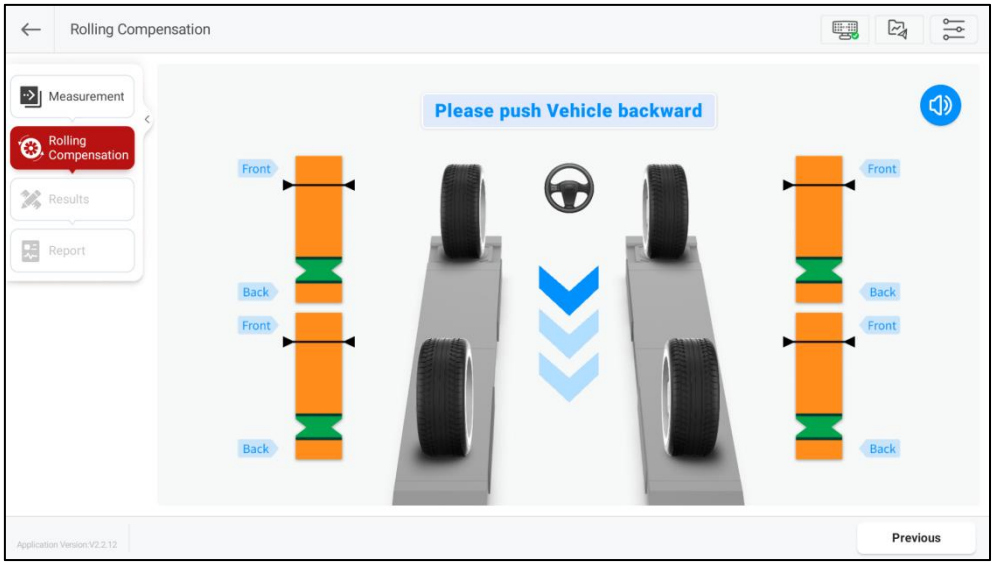

2) When the interface prompts “Please push car forward”, slowly push the vehicle forward until all pointers stay again in the green zone.

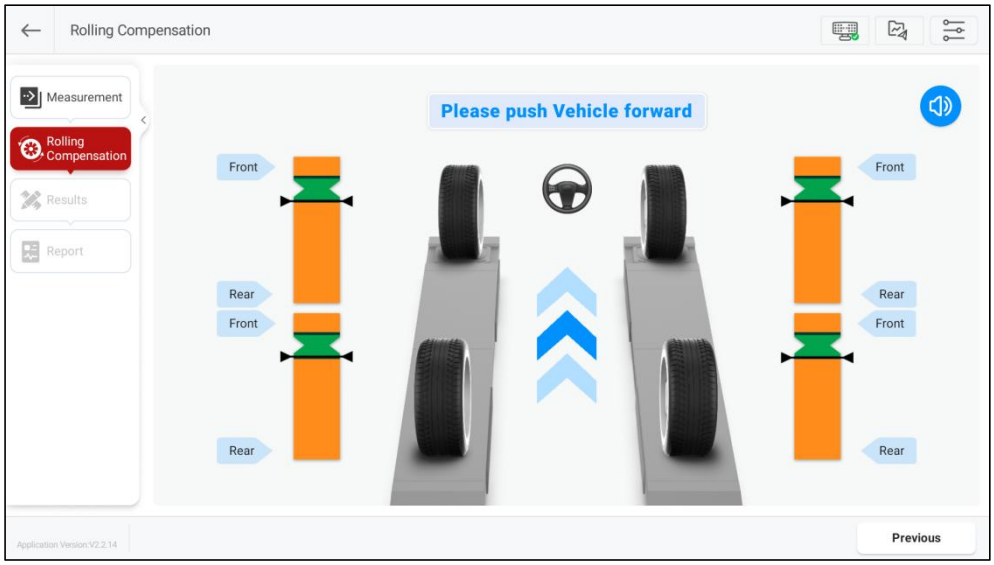

When the interface prompts “Rolling compensation completed”, the rolling compensation is complete and it automatically enters the "Measurement Results" interface.

3.4.3 Measurement Results

This function is used to view and save measurement results. To view the separate measurement results for “Rear Axle”, “Front Axle”, “All Measurements” and “Symmetry”, simply click the corresponding buttons at the top of the screen.

Save the measurement results before maintenance. The measurement results will be updated in real time after the maintenance is completed. Click [Next] to save the current measurement results and enter the “Inspection Report” interface.

3.4.4 Inspection Report

This function is used to view, save, and share inspection reports. On the right side of the screen, you can click to view inspection reports for four-wheel alignment, before and after maintenance, before maintenance, current values, symmetry, etc.

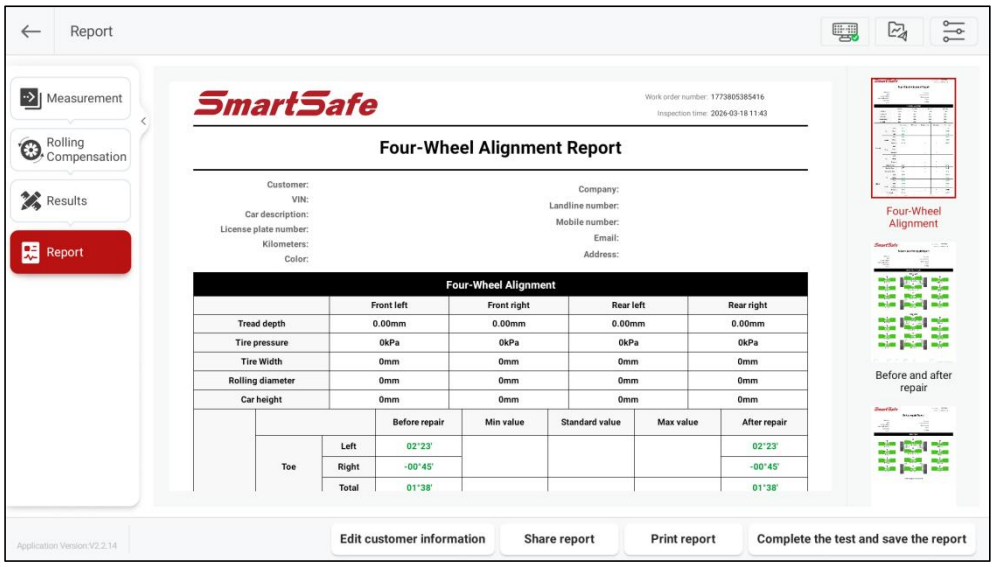

Screen button instructions are as follows:

[Edit Customer Information]	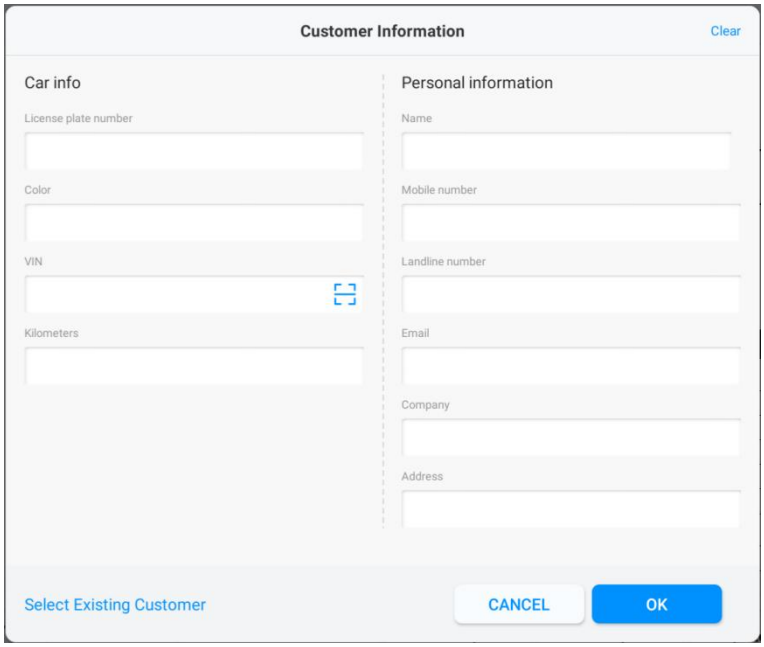 ● Add Customer Information: Users can add customer information. The new customer information will be synchronized to the [System Settings] > [Customer Information] interface. ● Select Existing Customer Information: Users can click [Select Existing Customer] to select customer information already saved in the system. Note: If you need to update a customer's information, in the

	Select Customer Information interface, you can click the button at the top right of the customer card to modify. The updated customer information will be synchronized to the [System Settings] > [Customer Information] interface. You can also edit it directly on the [System Settings] > [Customer Information] interface.
[Share Report]	The inspection report can be shared via QR code and email.
[Print Report]	Print the current inspection report or save the report as a PDF document.
[Test and save the report]	Save the inspection report on the inspection tablet, and you can click [Inspection Records] on the main interface to query and manage all saved inspection reports.
[ADAS Calibration]	Click "ADAS Calibration" button to start ADAS calibration.

3.5 Inspection Records

This function is used to view and manage saved inspection reports.

Click the [Inspection Records] on the main interface to enter the "Inspection Records" interface. The inspection records are classified according to the inspection time. Click the downward/upward arrow on the right side of the corresponding time to expand/collapse the record list.

In the search box at the top of the screen, you can enter keywords of the report name to quickly search and find the corresponding inspection report.

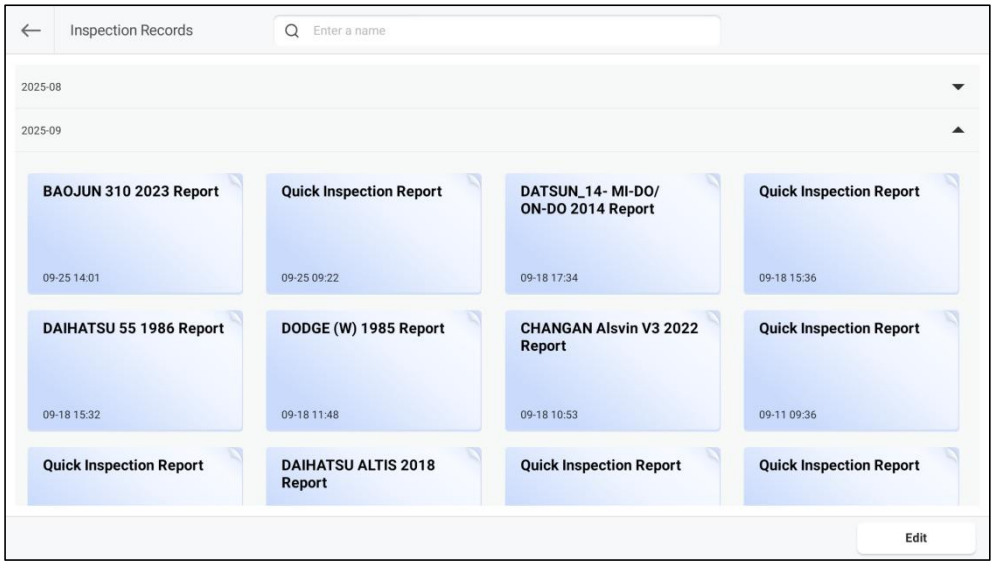

Clicking on a single record allows you to view the details of the inspection report, and you can also share and print the inspection report.

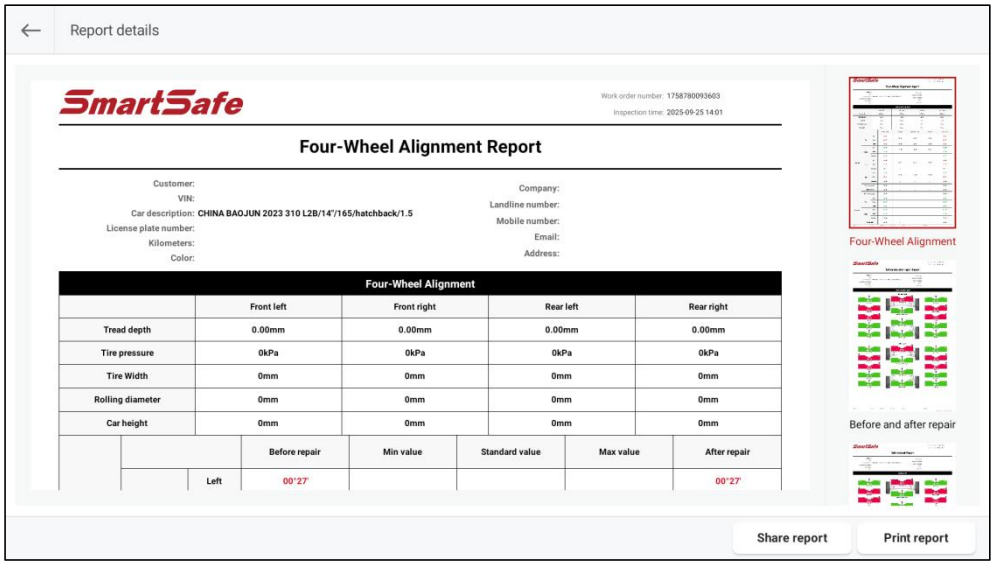

Click [Edit] to manage the inspection report.

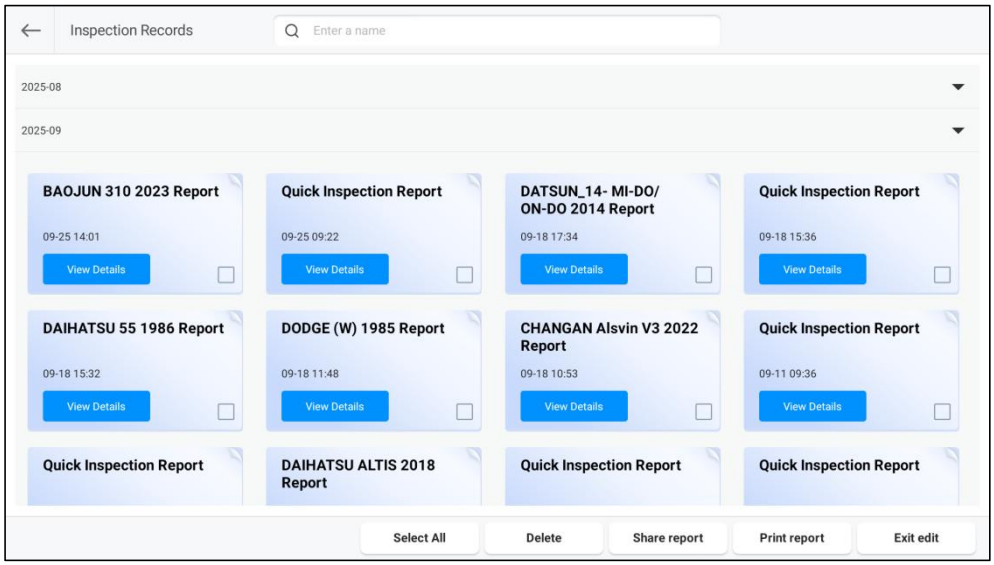

Screen button instructions are as follows:

[View Details]	View the details of this inspection report.
[Select All]	Select all expanded inspection reports.
[Delete]	Delete the selected inspection report.
[Share Report]	Share the selected inspection report, only one report can be shared at a time.
[Print Report]	Print the selected inspection report, only one report can be printed at a time.
[Exit Edit]	Exit edit mode.

3.6 Database

This function includes standard database and custom database. Standard database includes information about various series of products produced by numerous manufacturers both domestically and internationally during their production period, and it can update the content in the database in a timely manner through system upgrades.

3.6.1 Standard Database

Click [Database] on the main interface, then select [Standard Database].

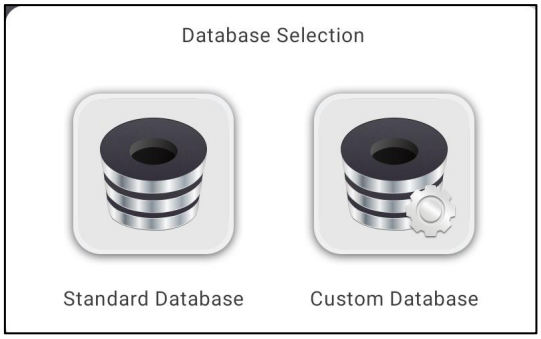

In the standard database, select the vehicle by [Region] -> [Brand] -> [Model] -> [Year] -> [Configuration] (you can quickly search by entering the corresponding keywords in the search box at the top of the screen) and enter the "Car info" interface to view the corresponding vehicle's parameter information.

- **Renewal**

The database is provided on a subscription basis. During the valid service period, you can access the full database service, including database download, updates to the latest version, and other functions. When the service is about to expire or has expired, contact the dealer to purchase a database renewal card, and enter the renewal card password to complete the renewal.

View service validity period: Click the pop-up window at the lower right of the interface to view the database service expiration time.

Note: Even if the device service period has expired, you can still continue to use the downloaded database and update the database versions released during the service period.

- **Upgrade**

Click [Upgrade] at the bottom of the screen to upgrade the standard database to the latest version.

Note: After the database upgrade, the original custom data will not be lost.

In the “Car info” interface, you can click [Unit Settings] to modify the value display unit for the corresponding parameters.

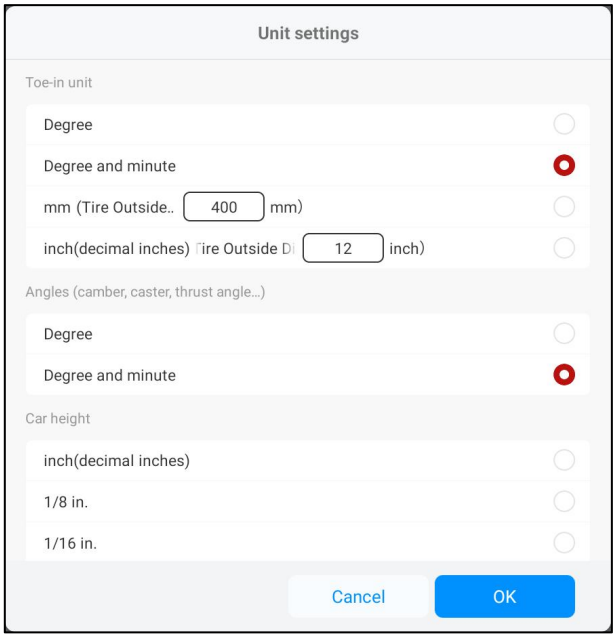

Click [Modify Configuration] to modify the corresponding parameter values as needed, then click [Save].

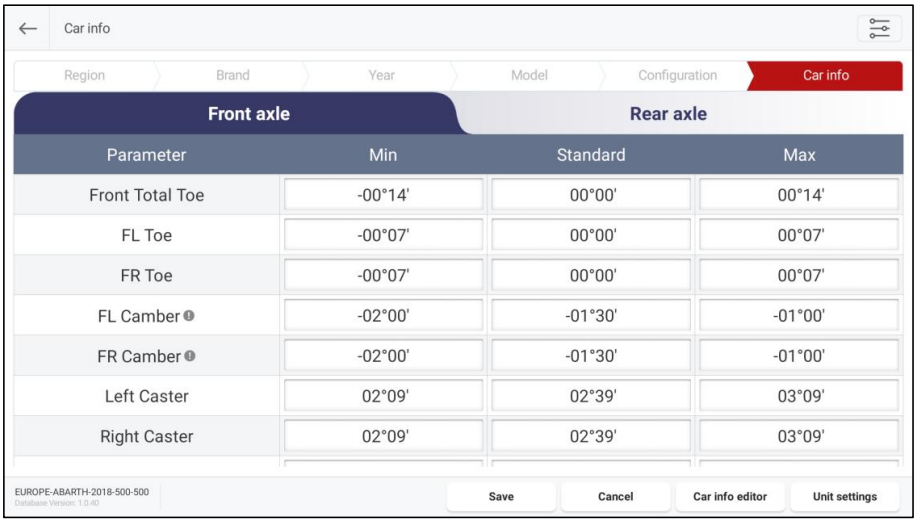

In the pop-up dialog, enter the configuration name in the pop-up dialog box, and click [OK] to save the modified configuration as a custom configuration.

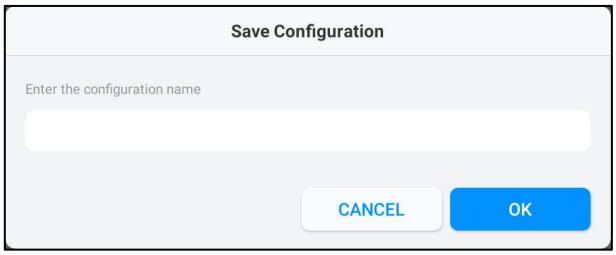

3.6.2 Custom Database

In addition to the standard database provided by the system, users can also add custom data to manually add vehicle model information that is not available in the standard data, making the system more suitable for maintenance station applications.

Enter the “Custom Database” management interface through [Database]-> [Custom Database] on the main interface.

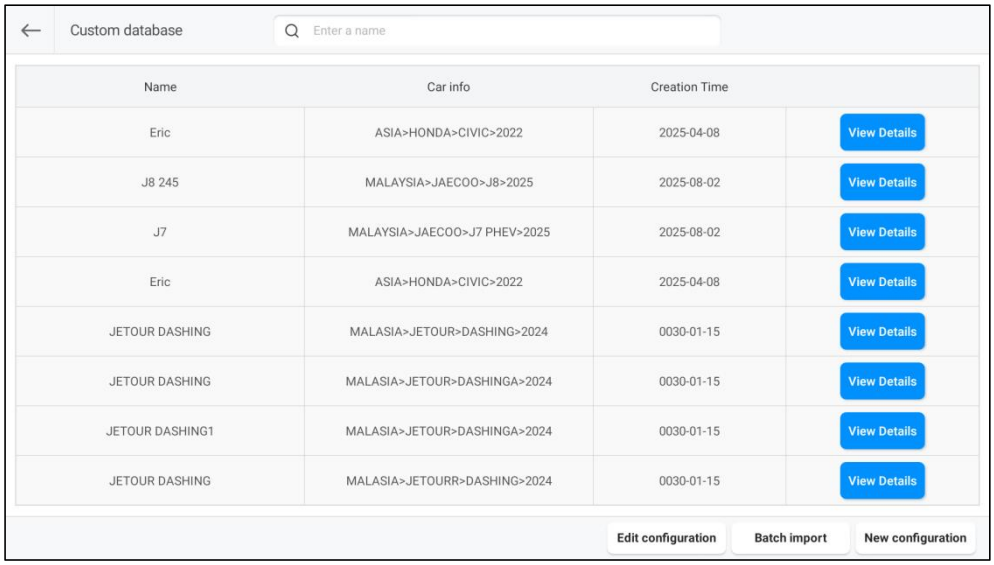

Screen button instructions are as follows:

[View Details]	View the details of this custom data.
[Edit Configuration]	Used to select and delete single or multiple custom data.
[Batch import]	Supports batch import of vehicle model information.
[New Configuration]	Used to add new custom data.

3.7 Device Management

This function is used to view device status and version information, manage device systems, and firmware upgrades.

Click [Device Management] on the main interface to enter the following interface:

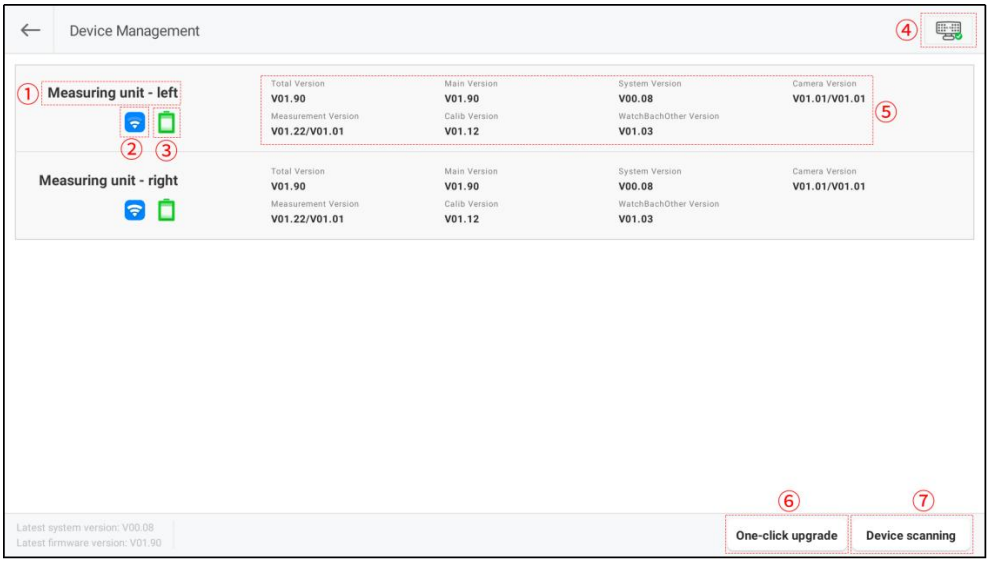

Screen buttons and display item descriptions are as follows:

① **Device name and identification**	Used to identify and distinguish different device.
② **Connection status**	When the device is not connected to the network, the icon is displayed in red. After the device is connected to the network, the icon turns blue and shows the network signal strength.
③ **Battery status**	● The icon is displayed as when the device is not connected to the network. ● The icon changes to after the device is connected to the network. ● The icon is displayed as a red when the battery level is below 20%.
④ **Device status**	Used to check device status. It allows you to check the network connection status of the measurement units and the tablet, the battery level of the

	measurement units, and the network signal strength of the measurement units.
⑤ **Version information**	Used to display the system version, firmware version, and other version information of the wireless 3D wheel aligner device.
⑥ **One-click upgrade**	Used for one-click upgrading of the device firmware and system to the latest version. Note: ● When upgrading, please set the power switch of the two measurement units to “ON”. ● Please make sure that the battery level of each individual unit is above 80% or place the device on the charging base to charge.
⑦ **Device scanning**	Used to scan and connect the device for networking.

3.8 System Settings

This function is used for parameter settings, managing customer and store information, viewing application version and serial number, and other information.

3.8.1 Parameter Settings

Click [System Settings] on the main interface to enter the “Parameter Settings” page. Users can switch between different display units for toe-in, angle, track width and wheelbase, tread depth, tire pressure, and vehicle height as needed.

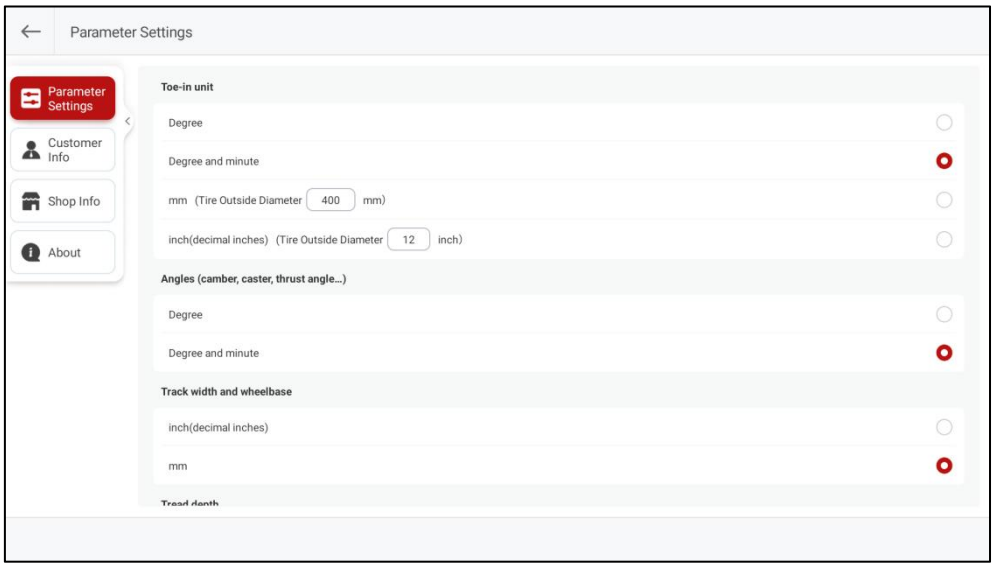

3.8.2 Customer Information

Link the vehicle owner information to the inspection report to make the report traceable, deliverable, and manageable, while supporting the shop′ s customer relationship management and service closed loop.

On the "Inspection Report" interface of General Inspection and Quick Inspection, click [Edit Customer Information] > [Select Existing Customer] to select customer information already saved in the system.

Click [Customer Information] on the left side of the screen to enter the "Customer Information" management interface.

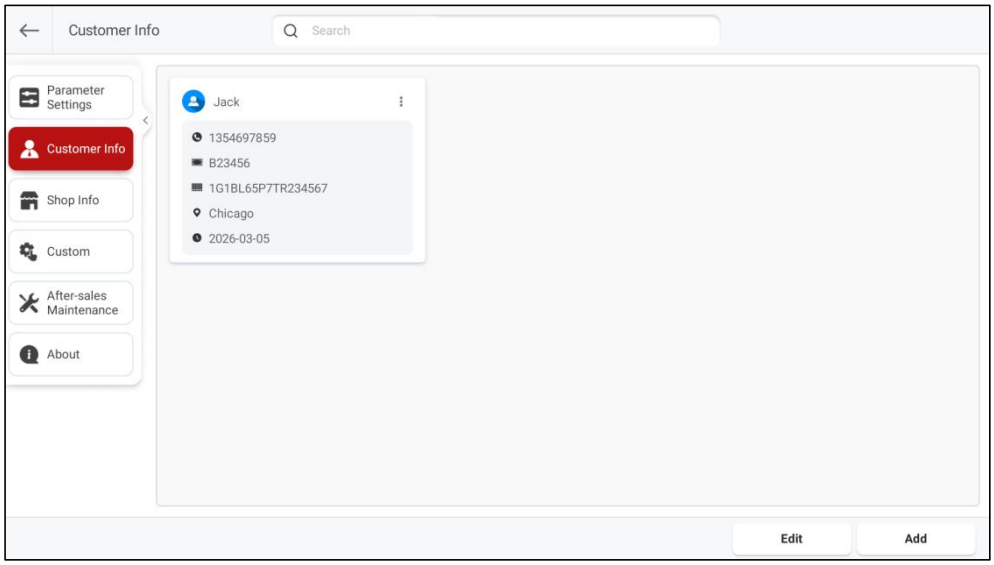

- **Add Customer Information:** Click [Add], enter the corresponding customer information in the pop-up window, and then click [Save] to add the customer information.

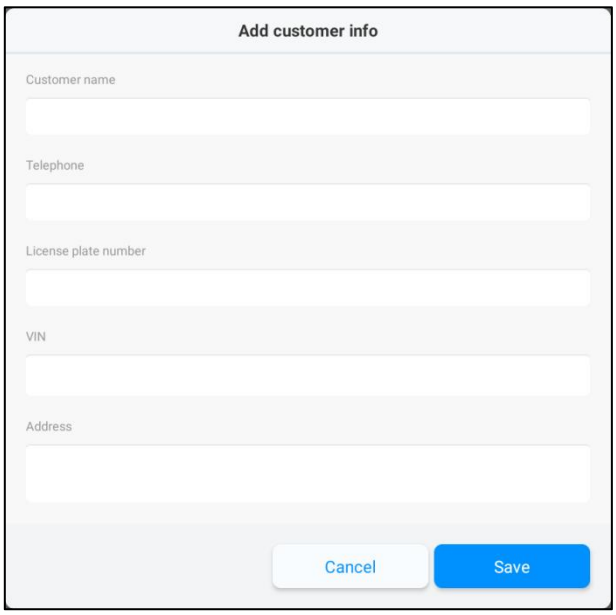

- **Modify Customer Information:** Click a single customer entry, edit the corresponding information in the pop-up window, and then click [Save] to save the modified content.

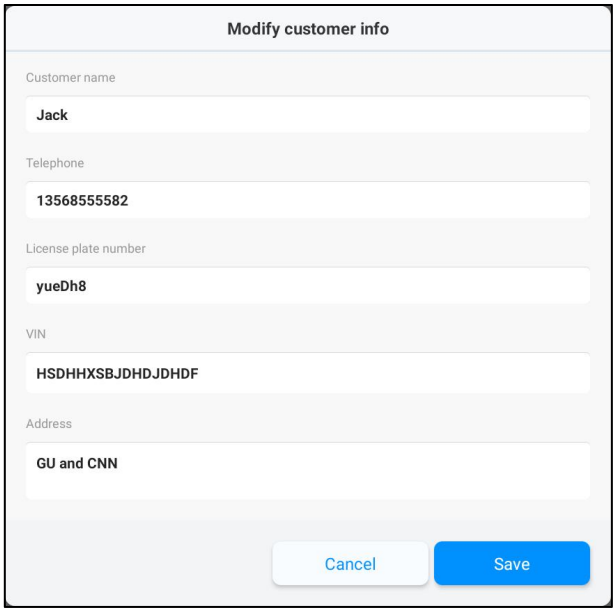

- **Delete Customer Information:** Click [Edit], then check the box next to the single customer information, and then click [Delete].

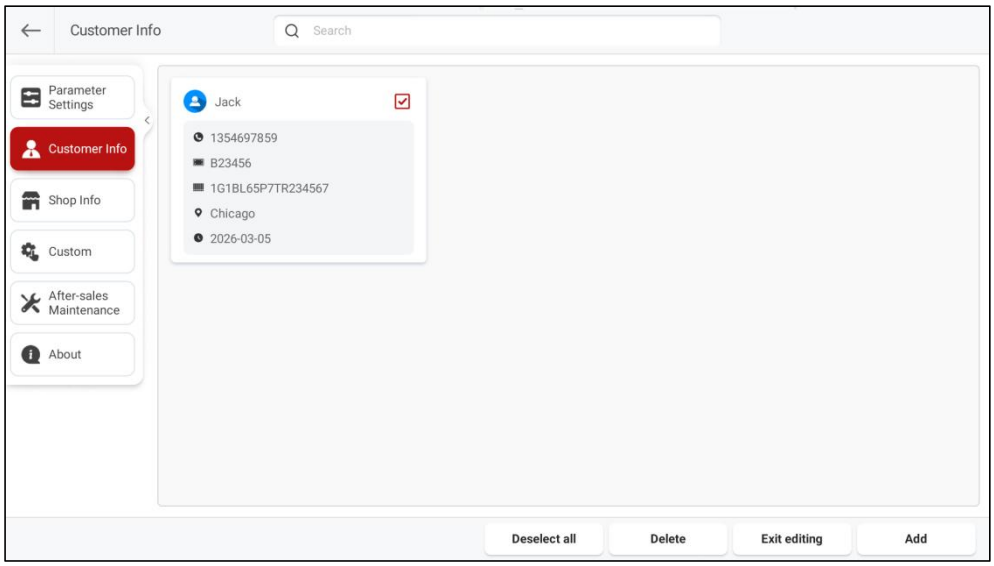

Click [OK] in the pop-up dialog box to delete the selected customer information.

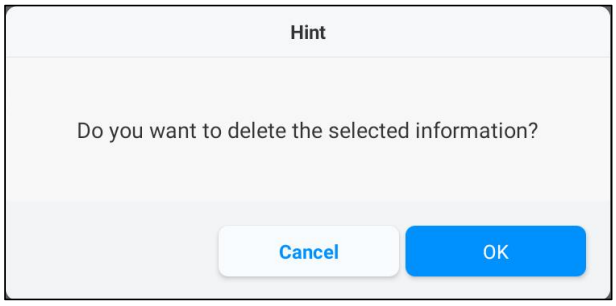

3.8.3 Store Information

Click the left side of the screen to enter the [Store Information] management interface.

Click [Edit], then edit the corresponding store information, click [Save] to save the new store information.

3.8.4 Custom

On the custom interface, users can define measurement parameters and customize how measurement results are displayed.

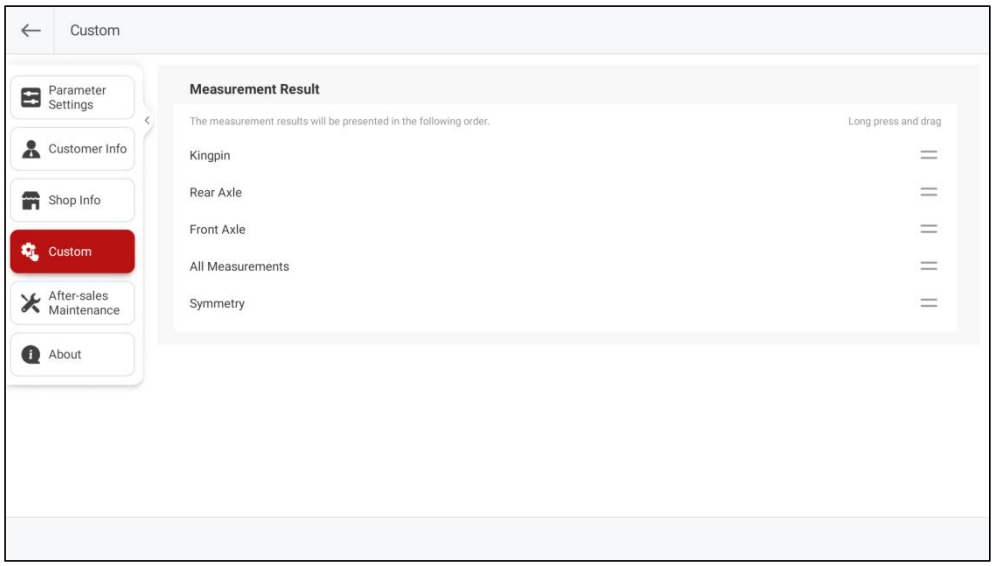

3.8.5 After-sales Maintenance

After-sales maintenance operations are for authorized dealers and after-sales technical support personnel only.

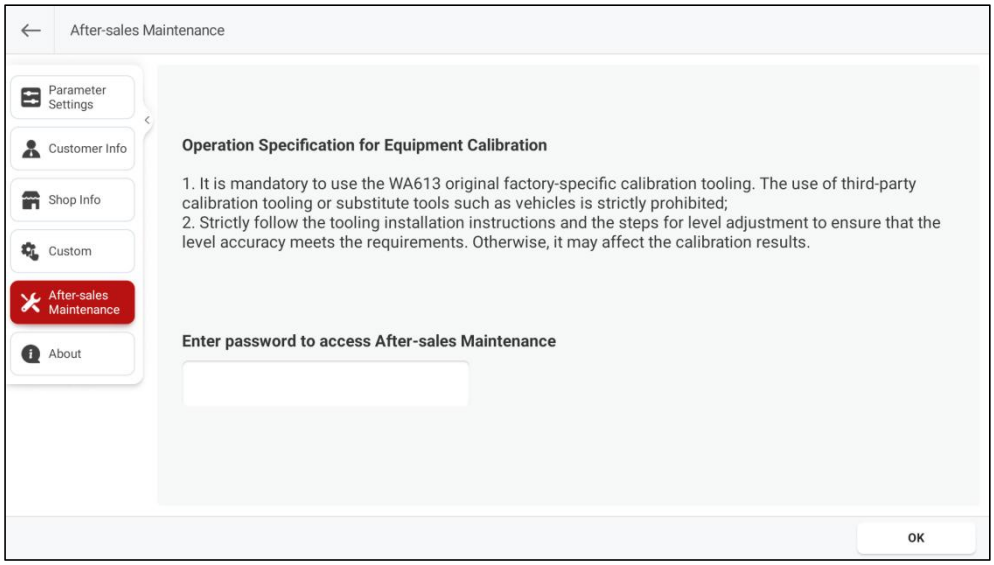

3.8.6 About

Click [About] on the left side of the screen to view the version number, serial number, and upgrade management.

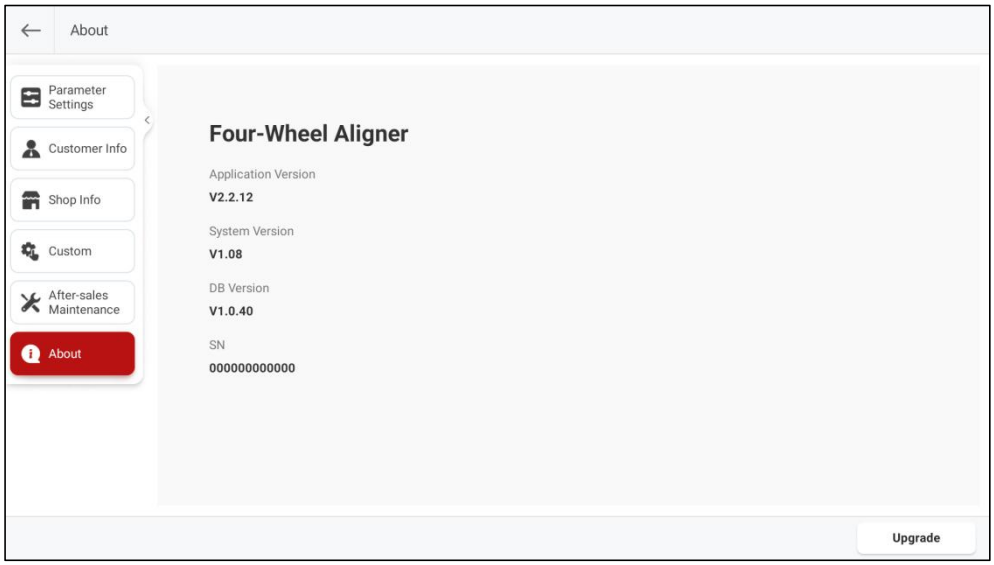

Click [Upgrade], the system will check for new application versions and upgrade the application to the latest version.

3.9 Terms

Four-wheel alignment angle refers to the relative angle between the suspension system and various moving components. Maintaining the correct four-wheel alignment angle ensures the stability of the vehicle's movement and reduces tire wear.

The main angles of the four-wheel alignment of a car include: camber, toe-in, caster, and kingpin inclination.

3.9.1 Geometric Center Line

Longitudinal center plane of the vehicle body and the intersection of the horizontal plane passing through the front and rear axles of the vehicle.

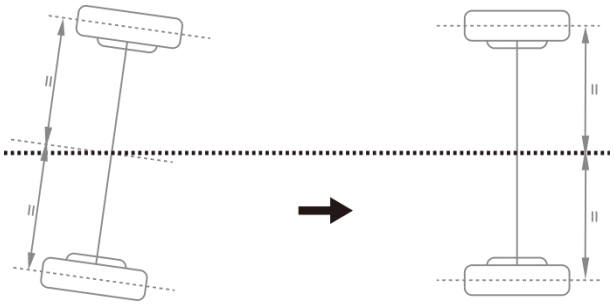

3.9.2 Camber

Camber is defined as an angle formed by the centerline of the tire and the vertical line as viewed from the front of the car, which is **positive when outward and negative when inward**, as shown in the figure below. The different angles can change the contact point and force point between the tire and the ground, directly affecting the tire's grip and wear condition, and changing the distribution of weight on the axle, avoiding abnormal wear of the bearings. In addition, the existence of the camber can be used to counteract the angular changes caused by the deformation of the suspension system components and the clearance between the moving surfaces after the vehicle body is subjected to loads. The existence of the camber also affects the direction of travel of the car, just as motorcycles can use the inclination of the body to turn. Therefore, the camber angle of the left and right wheels must be equal, so as not to affect the straight-line stability of the car under the balance of forces, and to improve the straight-line stability and avoid uneven tire wear in coordination with the toe-in. If there is no positive camber, the wheels will incline too much towards the inside when fully loaded, thereby accelerating tire wear and wheel bearing wear. Therefore, this parameter can extend the life of tires and wheel bearings.

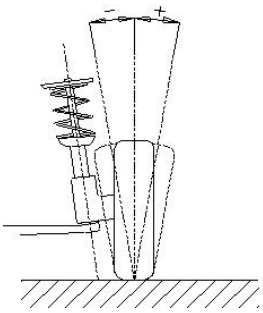

3.9.3 Toe-in (Angle)

Toe-in is defined as an angle formed between the centerline of the tire and the longitudinal axis of the car, as viewed downward from the top of the car, which is **positive when inward and negative when outward**, as shown in the figure below. The total toe-in value is equal to the sum of the Toe-in values of

the two wheels, which is the angle between the centerlines of the two tires. The function of the toe-in is to compensate for the tendency of the tire to roll inward or outward due to the camber angle and road resistance, in order to ensure the straight-line stability of the car.

The parameter associated with the toe-in is the toe-out, also defined as the angle formed by the two tires when viewed from above the vehicle. However, the symbol definition is opposite to that of the toe-in angle, **negative when inward and positive when outward**. Due to some people being accustomed to using the toe-out, special attention should be paid to the difference between the toe-in and toe-out.

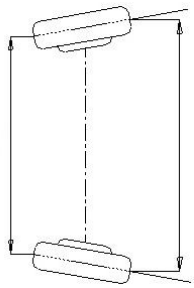

3.9.4 Kingpin Inclination

Kingpin inclination is defined as an angle formed by the centerline of the steering axis and the vertical line as viewed from the front of the vehicle, as shown in the figure below. The kingpin inclination angle can distribute the vehicle weight evenly on the bearings, protecting them from damage and making the steering force uniform and steering light. On the contrary, if the kingpin inclination angle is 0, the reaction force between the vehicle weight and the ground will generate a large lateral shear stress on the axle, which can easily damage the axle and make the steering heavy. In addition, the kingpin inclination is also the source of the steering return force of the front wheels. The kingpin inclination has been set at the beginning of the vehicle suspension design and is usually non-adjustable.

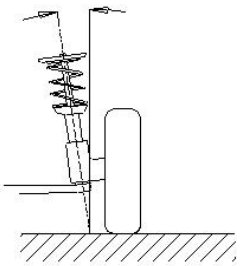

3.9.5 Kingpin Caster

Kingpin caster is defined as an angle formed by the centerline of the steering axis and the vertical line as viewed from the side of the vehicle, which is negative when forward and positive when backward, as shown in the figure below. The presence of the kingpin caster angle can make the intersection point of the steering axis and the road surface be in front of the tire contact point. The resistance of the road surface to the tire can be used to keep the car going straight. The principle is similar to the front wheel of a shopping cart automatically turning in the direction you apply force and maintaining straight movement. The larger the caster angle, the better the straight-line stability of the car and the better the steering response when turning. However, it will make the steering heavier. The kingpin caster angle of a normal car is approximately between 1~4 degrees.

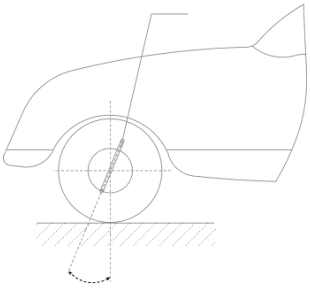

3.9.6 Toe-out when Turning 20°

Toe-out when steering is defined as the difference in steering angle between the two front wheels when turning 20°, as shown in the figure below. When turning, the angle that the inner wheel turns is usually greater than the outer wheel, with a difference of about 2 degrees. The purpose is to allow the car to turn smoothly with the instantaneous center of the rear axle extension line as the center of the circle when turning. In addition, when the turning angle of the inner wheel is larger, the resistance is also larger. The difference in resistance can cause the car to lean towards the side with greater resistance, making steering easier.

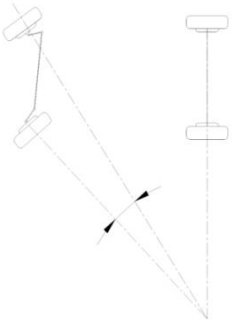

3.9.7 Thrust Angle

Thrust angle is defined as a angle formed by the bisector (thrust line) of the total toe-in angle of the rear wheels and the geometric centerline. It is generally specified that the value is positive when the thrust line is rightward and negative when the thrust line is leftward. If the thrust angle is not zero, the vehicle has a tendency for lateral movement. If this situation occurs, the toe-in of rear wheels should be adjusted.

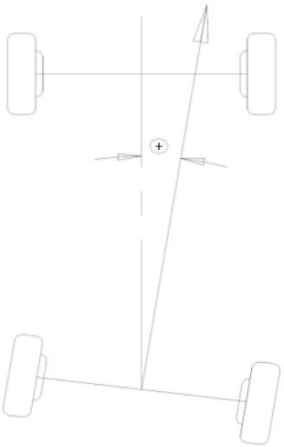

3.9.8 Max Steering Angle

The maximum steering angle of a car refers to an angle formed between the centerline of the front wheels

when not steering and the front wheels turning to the extreme left or right.

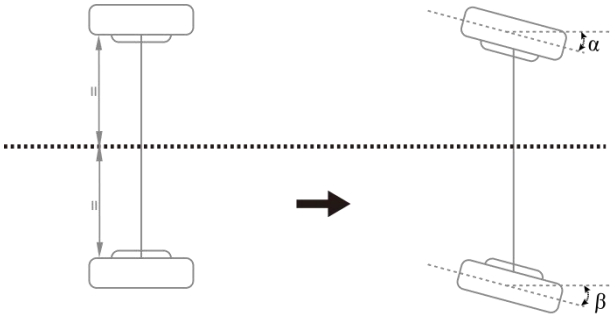

3.9.9 Wheelbase Difference

Wheelbase difference refers to the angle between the line connecting the centers of the two front wheels and the line connecting the centers of the two rear wheels (also known as wheelbase deviation). When the distance between the right wheel and the left wheel is greater, this state defines the wheelbase difference as a positive value. Conversely, when the distance between the right wheel and the left wheel is smaller, this state defines the wheelbase difference as a negative value. If the track widths of the front and rear wheels of the car are already known in the car's specifications, the wheelbase difference can be expressed in angular values, as shown in the figure below.

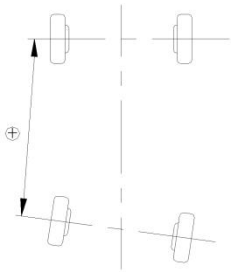

3.9.10 Track Width Difference

Track width difference refers to the angle formed by the line connecting the front left wheel and the contact point with the ground, and the line connecting the rear left wheel and the contact point with the ground (also known as the wheel track width deviation). When the distance between the center lines of the two rear wheels is greater than the distance between the center lines of the two front wheels, this state defines the track width difference as a positive value. Conversely, it is a negative value. If the left and right wheelbase of the car is already known, the track width difference can be expressed in angular values, as shown in the figure below.

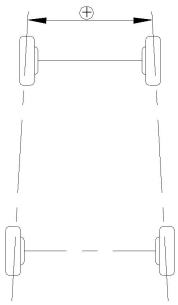

3.9.11 Left (right) Lateral Offset (angle)

The relative offset between the rear left (right) wheel and the front left (right) wheel in the lateral direction of the car is the lateral offset on the left (right) side. When the rear left (right) wheel is more inclined

outward than the front left (right) wheel, the left (right) lateral offset is positive, otherwise it is negative. The angle between the line connecting the center of the front and rear left (right) wheels and the thrust line is the left (right) lateral offset angle.

3.9.12 Axle Offset (angle)

Axle offset refers to the relative offset of the front and rear axles in the lateral direction of a car. When the rear axle is offset to the right compared to the front axle, the axle offset is a positive value; otherwise, it is a negative value. The angle formed between the bisector of the track width difference angle and the thrust line is known as the axle offset angle.

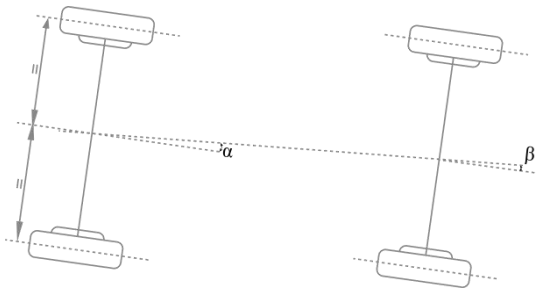

3.9.13 Delay (angle)

The relative offset in the longitudinal direction of a car between the two wheels on the same axle is referred to as "delay". When the right wheel on the front (rear) axle is behind the left wheel, the front (rear) delay is a positive value; otherwise, it is a negative value. The angle between the centerline connecting the two front (rear) wheels and the line perpendicular to the longitudinal geometrical centerline of the car is called the front (rear) delay angle.

3.9.14 Included Angle

The angle Y between the kingpin axis and the wheel axis is called the included angle, the value of which is the sum of the kingpin inclination α and the wheel camber β, as shown in the figure below.

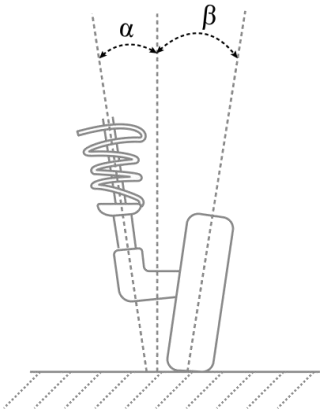

3.9.15 Wheel Alignment

Half of the difference between the left toe-in and the right toe-in of the front wheel.

3.9.16 Symmetric Value

The geometric dimensions of a vehicle are usually symmetrical and are used to preliminarily determine whether the vehicle has been involved in an accident and the condition of the chassis, assisting in four-wheel alignment.

4. ADAS Calibration Equipment

4.1 Product Introduction

4.1.1 About ADAS

ADAS, fully named the "Advanced Driver Assistance System". It's operation principle is to utilize vehicle cameras, radars and other sensors to constantly perceive the surrounding environment during automobile operation. It collects data, identifies, detects, and tracks both static and dynamic objects. Combining this with navigation map data, the system performs computational analysis to allow drivers to preemptively perceive potential hazards. This effectively enhances the comfort and safety of automobile driving.

The cameras and other sensors used in the Advanced Driver Assistance System must be precisely calibrated and adjusted. Incorrect calibration can cause the system to output incorrect results or even fail completely, leading to serious accidents and even death.

4.1.2 About ADAS Calibration Equipment

SmartSafe ADAS calibration equipment calibration equipment is a comprehensive and flexible calibration equipment that allows you to effectively and accurately calibrate the vehicle camera, radar, and other sensors used in all types of driver assistance systems, such as the front-facing camera for the Lane Departure Warning (LDW) system, and a radar sensor for the Adaptive Cruise Control (ACC) system (optional, for details please refer to 4.6.2 Radar Target (Optional), etc.

When using the ADAS calibration equipment calibration equipment to perform vehicle calibration, it is necessary to use it together with ADAS-compatible diagnostic equipment authorized or approved by SmartSafe (purchased separately). The calibration of the ADAS system requires adjusting the relative position between the ADAS calibration equipment calibration equipment and the vehicle to be calibrated, while together with the calibration software on the diagnostic equipment.

4.2 Precautions in Use

Safety Warning

The ADAS calibration equipment is suitable for vehicle ADAS system calibration. To avoid causing casualties, property damage, and accidental injury, please read all safety instructions in this section carefully before using the product:

- To avoid improper operation, the operator of the ADAS calibration equipment needs to have a background in motor vehicle technology and be familiar with the hazards, risks and working conditions in a repair shop.
- The operator is required to read and understand all the instructions in this manual. In addition, the operator should note the work methods and safety warnings that follows the operating tips.
- In addition, please refer to and follow the regulations of the Trade and Industry Bureau, trade unions, automobile manufacturers and environmental protection regulations, as well as all laws and regulations related to automobile repair shops.

The safety messages herein cover situations SMARTSAFE is aware of SMARTSAFE cannot know, evaluate or advise you as to all of the possible hazards. You must be certain that any conditions or service procedure encountered do not jeopardize your personal safety.

Warning Symbols and Definitions	
	Indicates a serious hazardous situation that, if not avoided or handled incorrectly, could lead to death or severe injury to the user.
	Indicates a potential hazardous situation that, if not avoided or handled incorrectly, could result in minor injury or property damage.
	Indicates the points that the user should observe and don'ts when handling the equipment.

Exhaust gases from the engine contain a variety of toxic compounds (e.g. hydrocarbons, carbon monoxide, nitrogen oxides, etc.), which can be hazardous to human health, cause unresponsiveness, or even result in serious bodily injury or death, and the vehicle under test should be parked in a well-ventilated area during operation.

Please read all safety warnings and operating information carefully. Failure to follow safety warnings and operating information can result in electric shock, fire or serious injury to personnel.

1. Always perform vehicle calibration in a safe environment.
2. Do not connect or disconnect diagnostic equipment while the ignition is switched on or the engine is running.
3. Never operate the diagnostic equipment while driving the vehicle as this may cause a distraction and result in a crash.
4. Before starting the engine, pull the handbrake, especially block the front wheels, and put the gearshift in neutral (manual transmission) or [P] gear (automatic transmission) to avoid starting the engine and causing the vehicle to run out and injure someone.
5. Smoking or the presence of sparks near the battery or engine is prohibited. Do not operate the equipment in an explosive atmosphere.
6. Place a fire extinguisher next to operation place.
7. Wear protective eyewear when inspecting the vehicle.
8. Set the vehicle to stop the vehicle from rolling and moving.
9. Parts such as ignition coil, distributor cap, ignition wiring, and ignition plugs generate dangerous voltages when the engine is running, please take extra care when working around theses parts to prevent electric shock.
10. To avoid damaging the diagnostic equipment or generating erroneous data, make sure:
    - The vehicle battery is fully charged;
    - The connecting parts of the vehicle diagnostic socket are clean and in good condition;
    - The vehicle diagnostic socket is securely and firmly connected to the diagnostic equipment.

Precautions for Operating the ADAS Calibration Equipment

To avoid injury to the user or damage to the equipment due to improper operation, please note the following points:

- Be sure to install the equipment according to the method described in the instructions.
- Prevent the ADAS calibration equipment from coming into contact with water, high-temperature heat sources, and from being subjected to violent shocks.
- Prevent the ADAS calibration equipment from prolonged sunlight.
- Make sure that there are no light reflection points on the calibration target.
- There should be no direct light sources within the camera's field of view, otherwise the camera will reduce the exposure and darken the captured calibration target, which will adversely affect the calibration.
- Properly lay out the light sources to ensure an even distribution of light on the calibration work site.
- Please maintain ADAS calibration equipment regularly.

Precautions for Operating the Vehicle

Please read the following information carefully when performing calibration operations:

- Make sure that all wheels of the vehicle are parked on a level ground.
- For automatic transmission vehicles, the gear should be set to P (Park) position
- During the test, make sure that the connection between the diagnostic equipment and the diagnostic socket is good so that the test will not be affected by signal interruption.
- The vehicle system is operating normally and no faults are stored in the fault code memory of the electronic control unit.
- To avoid losing the connector, make sure it is unplugged from the vehicle diagnostic socket after use.
- To avoid losing the connector, unplug it from the vehicle diagnostic socket after use and keep it in a safe place.

Precautions for using the laser equipment

- Store in a dry place.
- Laser beams projected directly into the eyes can cause eye damage.
- Do not look directly at the laser rays.
- Please fix the laser level and do not point the laser beam at people or animals.
- Do not operate the laser level in the vicinity of children. Do not allow children to use the laser instrument.
- Do not observe the laser beam with a magnifying glass or telescope.
- Do not remove or scratch the warning labels on the laser equipment.
- Do not allow the instrument to come close to pacemakers.

- The instrument must be kept away from magnetic data carriers and machines susceptible to magnetic field interference.
- Do not operate the instrument in explosive environments such as those with flammable liquids, gases or dust.
- Do not use strong detergents or chemicals to clean the instrument. The instrument can be cleaned with water or water with a small amount of soap.
- Please prevent the instrument from falling.
- Remove the battery when the instrument is not used for a long time.
- When installing the laser meter, make sure it is securely mounted.

The laser identification goggles should not be used as protective eyewear. Wearing laser identification goggles may help you recognize lasers, but they do not protect you from laser radiation.

4.3 First Time Use

4.3.1 Installation of ADAS Calibration Equipment

4.3.1.1 Installation of Crossbeams

1. Move the green bluetooth distance meters on the left and right crossbeams to each end. Place the segmented crossbeam on the workbench, allowing its left and right ends equipped with the distance meter assembly to hang over both sides of the workbench.

   Notes:

   a. Ensure that at least two-thirds of the segmented crossbeam is placed at the workbench to avoid tipping.

   b. If installing on the floor, it is recommended that protective mats be laid to avoid scratching the crossbeams. The distance meter assembly on both sides of the crossbeam can be removed as needed to allow the segmented crossbeam to sit flat on the floor for complete installation.

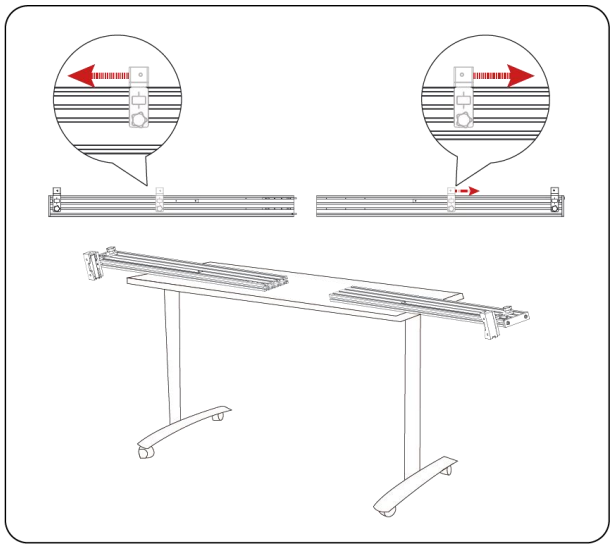

2. Ensure that the crossbeam locating pins are aligned with the corresponding holes and connect the segmented crossbeams in the direction of the arrows shown in the diagram.

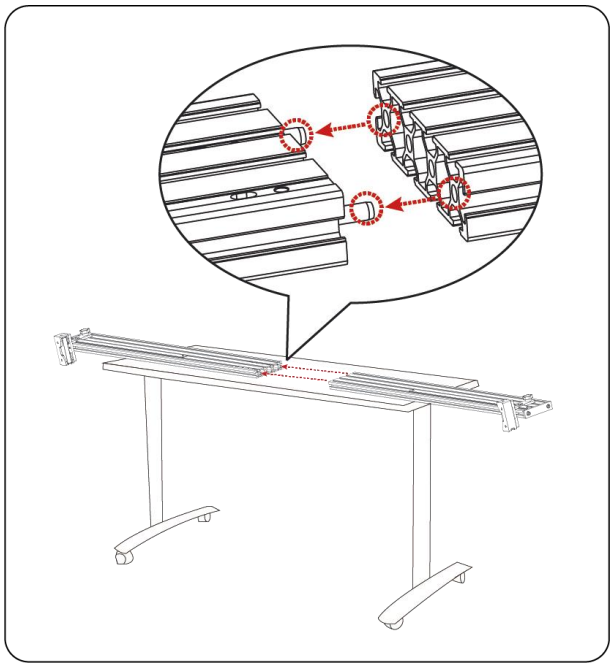

3. Use Allen wrench to loosen 8 fixing screws (refer to position S1~S8 in the diagram) and move the one-piece splicing bar to the middle position of the crossbeam, make sure that the through-holes on the one-piece splicing bar and the through-holes on the crossbeam are aligned (refer to position P1~P4 in the diagram), and then tighten the 8 fixing screws to fix the one-piece splicing piece.

Note: Before fixing the splices, make sure that the left and right crossbeam connection ports fit perfectly without any obvious gaps, and that the crossbeams on both sides are flush.

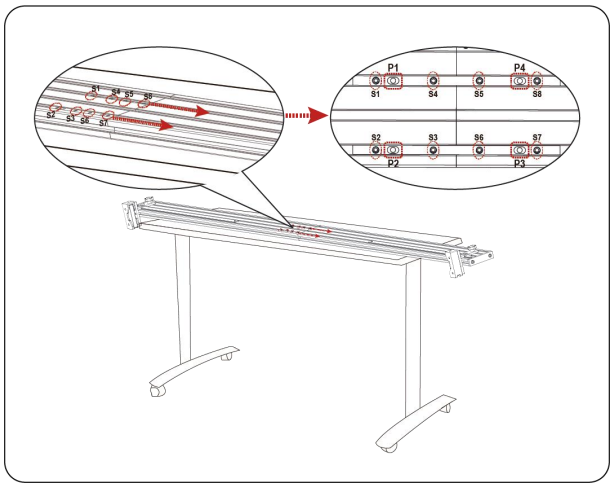

4. Place the connected crossbeam onto the crossbeam fixing plate, align the mounting holes on both the crossbeam and the fixing plate, and then tighten twelve fixing screws to securely fasten the crossbeam in place.

Notes:

1) The scale on the side of the crossbeam should face the back of the calibration tool and the front of the laser distance meter should point in the opposite direction of the scale.

2) Due to the heavy weight of the crossbeam, it is recommended that two people work together to install it,

so as to avoid any personal injury that may be caused by dropping it during assembly.

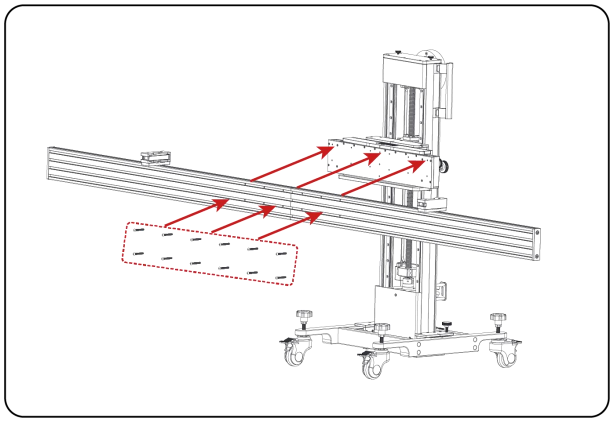

4.3.1.2 Installation of the Large Screen

The steps for installing the large screen are as follows:

1. Install the large screen stand

   Insert the large screen stand into the fixing slot on the column and make sure that the large screen stand is inserted into the bottom of the fixing slot.

   Tighten the fixing knob on both sides to secure the large screen stand.

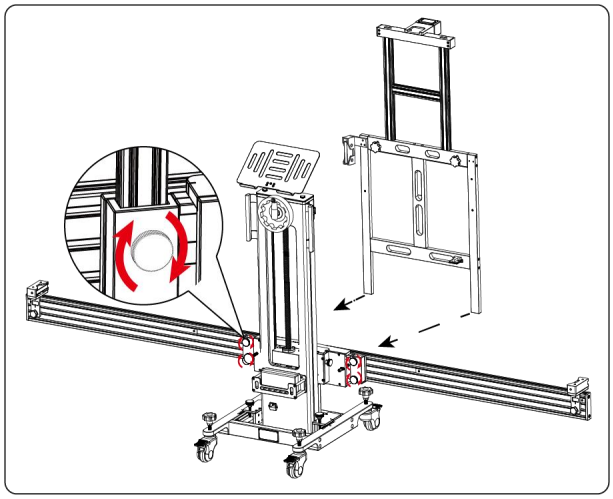

2. Secure the mounting plate to the stand with the screws.

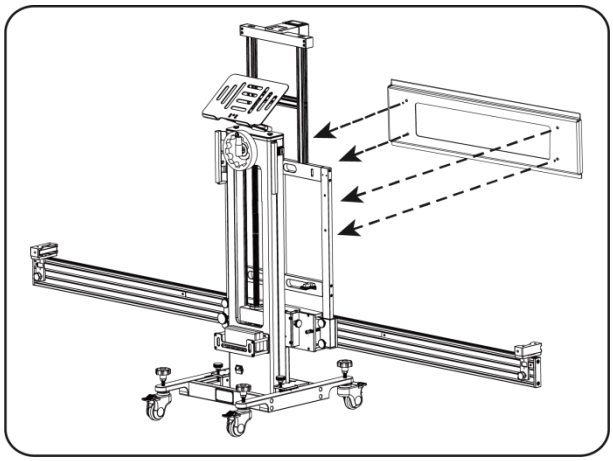

3. Install the large screen bracket and secure the large screen to the bracket with screws.

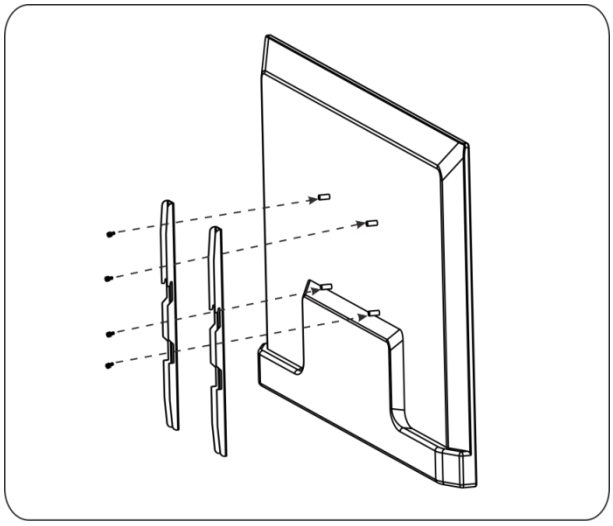

4. Attach the bracket on the back of the large screen to the mounting plate, and ensure that the holes on the bracket overlap with the holes on the stand .

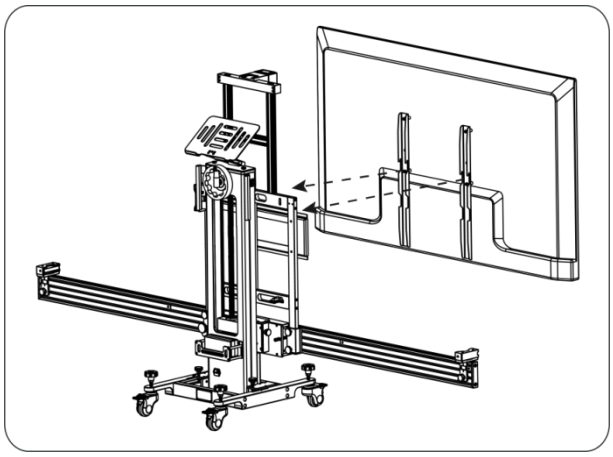

5. Secure the stand and bracket with screws.

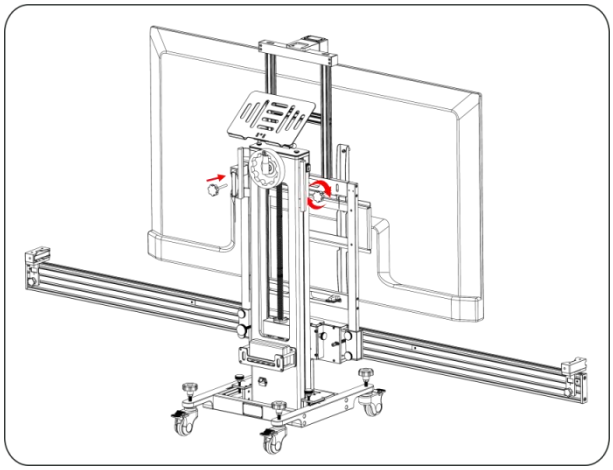

4.3.1.3 Installation of the Mid-mounted Laser

Attach the mid-mounted laser to the large screen stand.

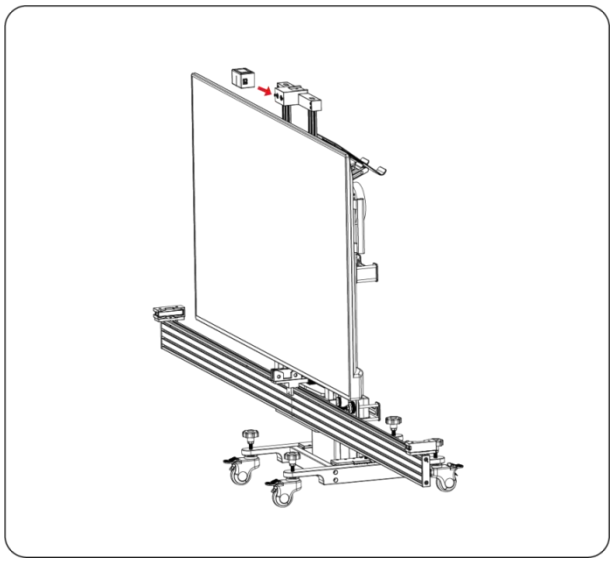

4.3.1.4 Installation of the Tablet Stand

Keep the tray of the tablet stand facing towards the rear of the equipment, aligning the mounting holes on the base of the tablet stand with those on the top of the upright column. Insert the fixing knob into the mounting holes and rotate the fixing knob to secure the tablet stand.

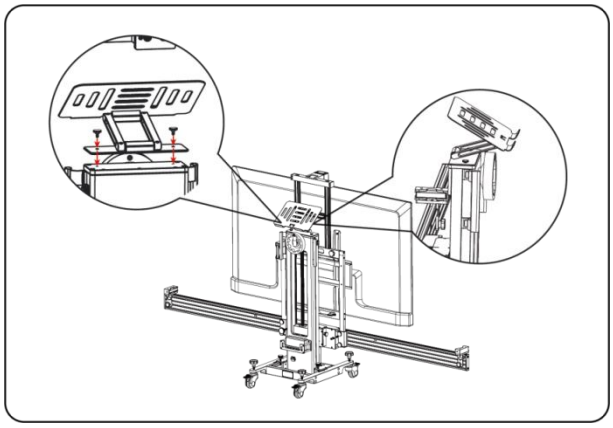

4.3.1.5 Installation of Wheel Clamp Assembly

Follow the steps below to install the wheel clamp assembly on the vehicle tire.

1. Align the wheel clamp panel vertically with the calibration equipment, then hold the handle to suspend the wheel clamp on the tire.

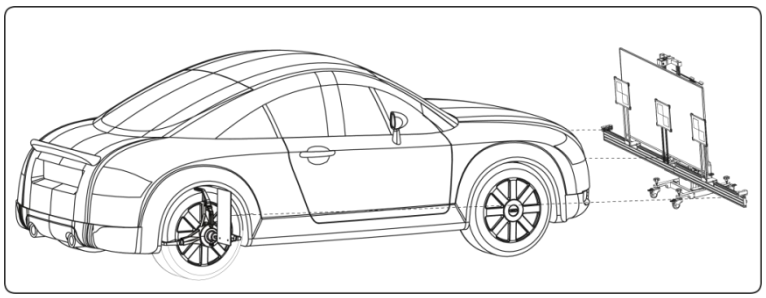

2. Make sure the level bubble (7) of the wheel clamp panel is centered, then turn the adjustment knob (5) to tighten the wheel clamp on the tire.

NOTE: See 2.5 wheel clamp assembly diagram for a description of the wheel clamp assembly.

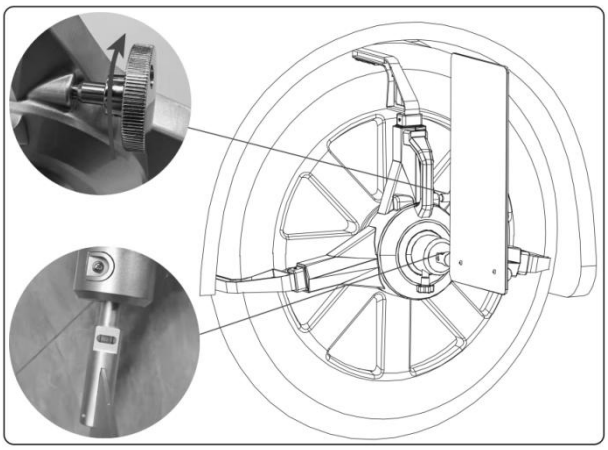

4.3.2 Activate Software ADAS Calibration Function

Before using the calibration function, the user needs to activate the ADAS function authorization on the diagnostic tool (purchased separately) with the activation card included with the machine.

The specific activation steps are as follows:

*Note: For different diagnostic tool, the access to ADAS function may be different.

1. Start the diagnostic device and enter the software main interface.

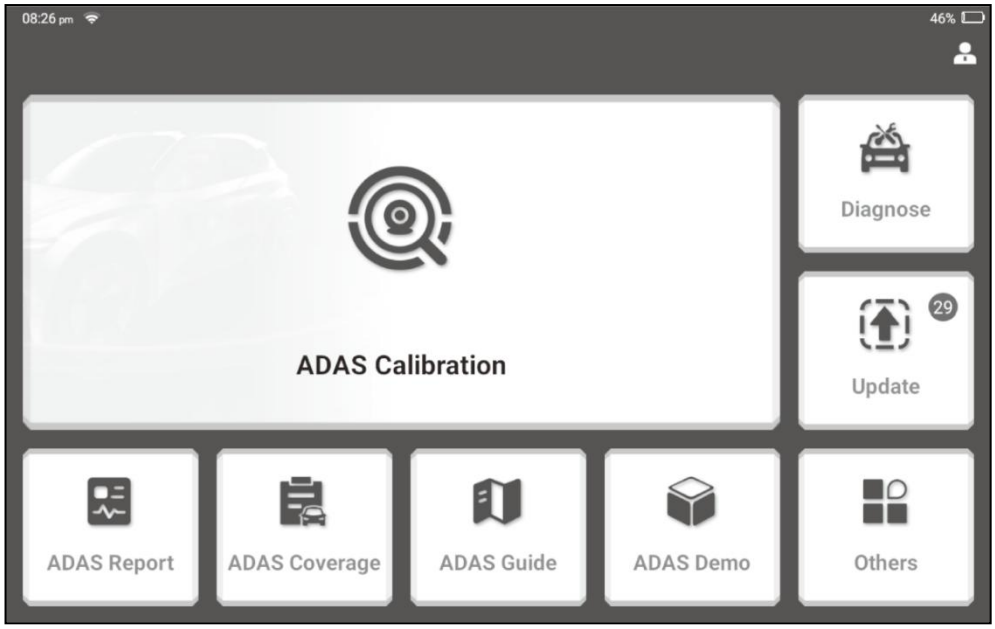

2. Click the "ADAS" icon on the screen, if the ADAS function is not activated, the screen will display as follows:

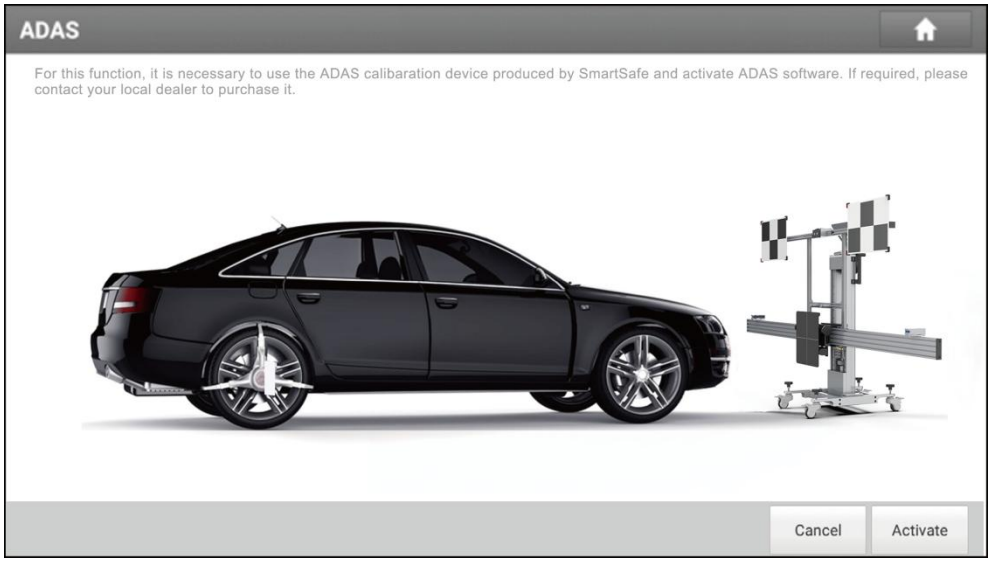

3. Click "Activate" to enter the following interface:

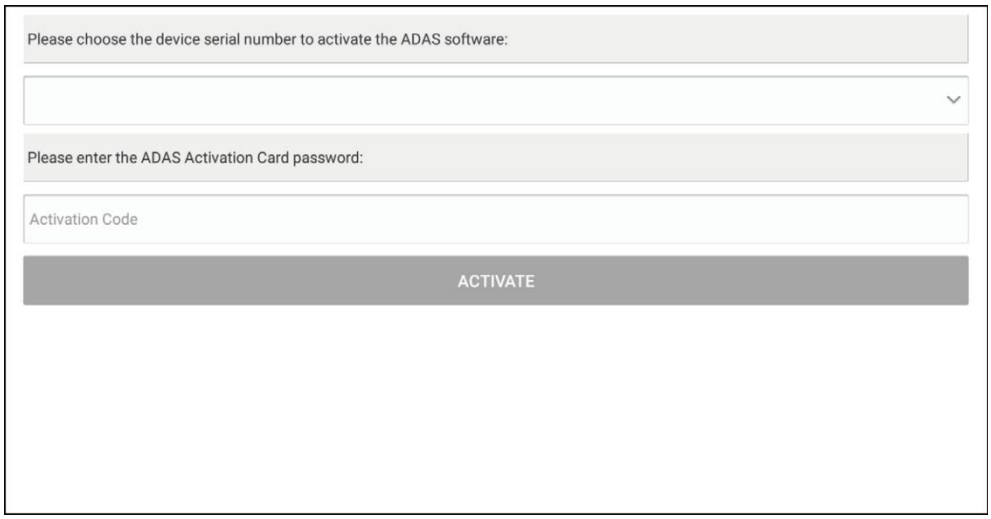

4. Select the correct device serial number, enter the 24-digit activation code (take out the ADAS activation card that comes with the machine, and scratch the coating area to display the activation code), and click "Activate".
5. Complete ADAS activation.

4.4 Starting to Use ADAS Calibration Equipment

The calibration operation must be carried out in strict accordance with the software prompts on the diagnostic equipment. ADAS calibration can be divided into dynamic calibration and static calibration. For static calibration, it is necessary to use the calibration equipment and the corresponding target or large screen (used to display the corresponding target of various models) to complete. For static calibration, users need to place the calibration equipment in a fixed position in front of the vehicle according to the software prompts and adjust the equipment to be centered parallel to the vehicle, use the correct calibration target, and adjust the target to the height specified by the software.

4.4.1 Prerequisites for Using the ADAS Calibration Equipment

Reason for calibration:

- Repair or replacement of the sensor control unit (replacement of ACC radar, front camera sensor).
- The sensor deviation angle is outside the normal range (incorrect angle of mounting position).
- The position of the sensor on the vehicle body has changed (the sensor or the component used to fix the sensor has been moved).
- Repair or replace component for fixed sensor (replace bumper, front windshield).
- Adjust the chassis.

Before performing the calibration procedure with the calibration equipment, make sure of the following conditions:

- The part on the vehicle where the sensor is located must not be damaged.
- The fixed sensor component and stand must not be deformed.
- Check the air pressure in the tires and correct to the recommended value if necessary.
- Tighten the parking brake and close the doors.
- Ensure that the vehicle's coolant and oil are within the recommended range and that the fuel is topped up. The vehicle must not be loaded (not carrying passengers or cargo, etc.).
- Connect the VCI to the vehicle and ensure that the vehicle has no fault codes for systems other than those related to ADAS.
- During the calibration process, operators should not lean on the vehicle.

4.4.1.1 Work Site Dimensions

- **Front Camera**

The site requirements for calibrating the front camera are as follows:

Distance A = approximately 2.8 meters (crossbeam width)

Distance B = approximately 1 meter (from crossbeam to wall or fixed object)

Distance C = at least 0.5 meters (from the edge of the crossbeam to other obstacles)

Distance D = varies from vehicle to vehicle, approximately 2.5 meters recommended (from the large screen to the vehicle)

Distance E = reserve approximately 1 meter (from vehicle to other obstacles)

Distance F = at least 0.5 meters (walkway for staff)

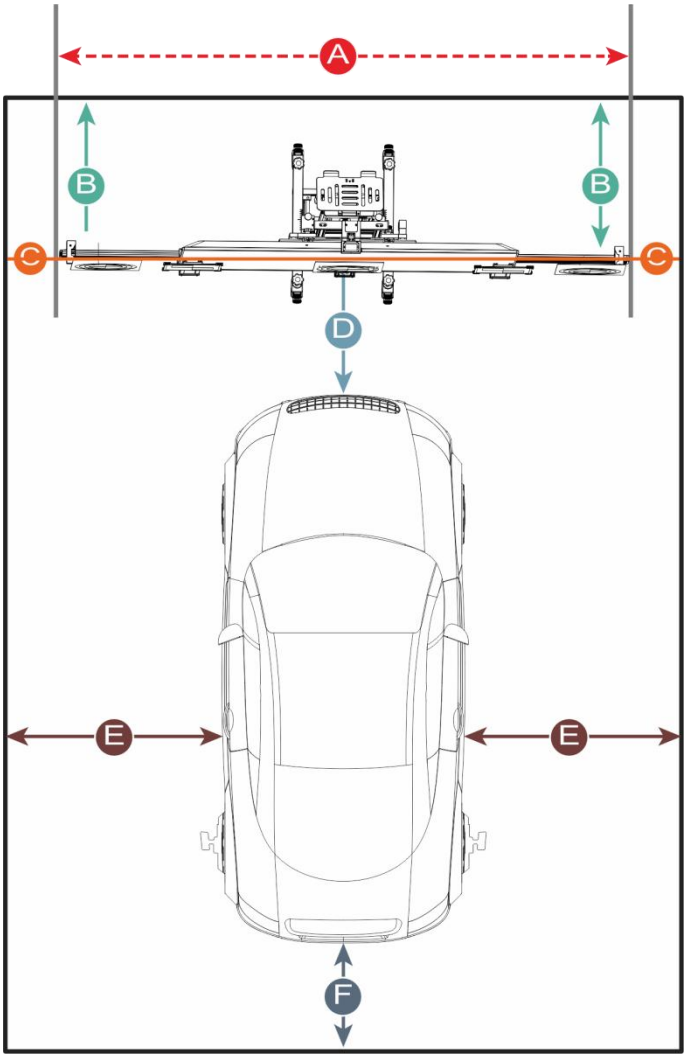

- **Rear View & Surround View Cameras (Optional)**

The site requirements for calibrating the rear view camera and the surround view camera depend on the size of the vehicle and the size of the calibration target. The following is a detailed explanation of the the dimensional requirements of the work site, with the largest vehicle and the largest calibration target in different regions as example for user's reference.

<u>American Vehicles:</u>

Distance A = approximately 7.3 meters (the entire width of the work site)

Distance B = approximately 12 meters (the entire length of the work site)

Distance C = at least 0.5 meters (walkway for staff)

Distance D = approximately 1.7 meters (the width of the calibration target, varies from vehicle to vehicle)

Distance E = approximately 2.9 meters (width of the vehicle, varies from vehicle to vehicle)

<u>European vehicles:</u>

Distance A = approximately 4.5 meters (the entire width of the work site)

Distance B = approximately 7 meters (the entire length of the work site)

Distance C = at least 0.5 meters (walkway for staff)

Distance D = approximately 0.8 meters (the width of the calibration target, varies from vehicle to vehicle)

Distance E = approximately 1.9 meters (width of vehicle, varies from vehicle to vehicle)

Asian Vehicle:

Distance A = approximately 6.1 meters (the entire width of the work site)

Distance B = approximately 9.5 meters (the entire length of the work site)

Distance C = at least 0.5 meters (walkway for staff)

Distance D = approximately 1.6 meters (the width of the calibration target, varies from vehicle to vehicle)

Distance E = approximately 1.9 meters (width of vehicle, varies from vehicle to vehicle)

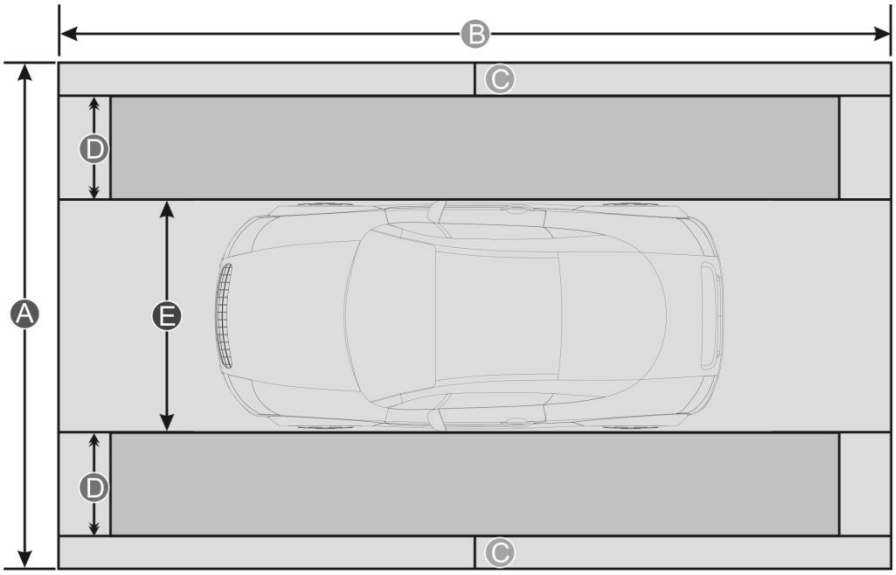

4.4.1.2 Work Site Floor Requirements

Make sure that all wheels of the vehicle are parked on a level ground.

Correct way:

✓	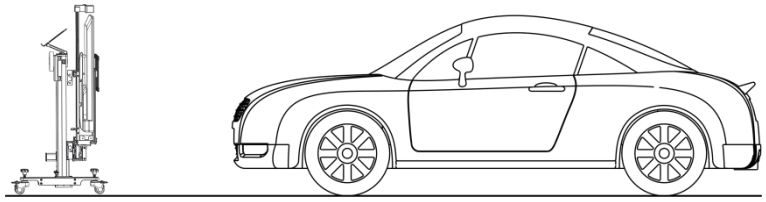
✓	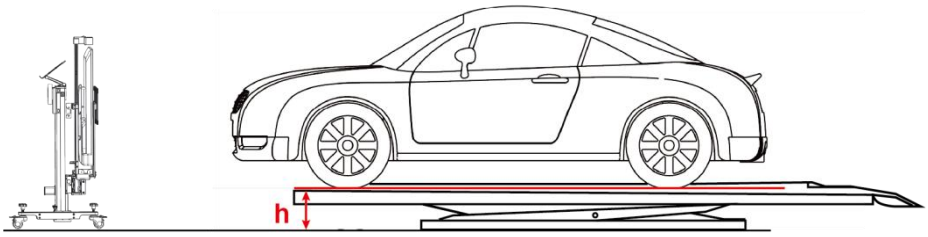

Wrong way:

✗	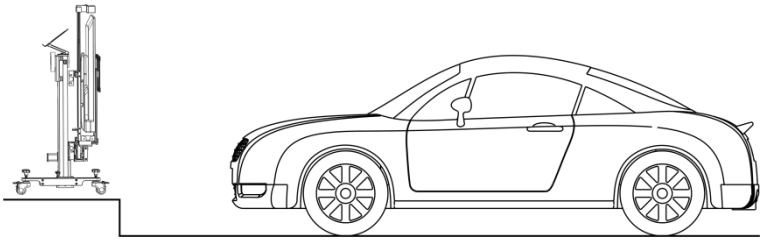
✗	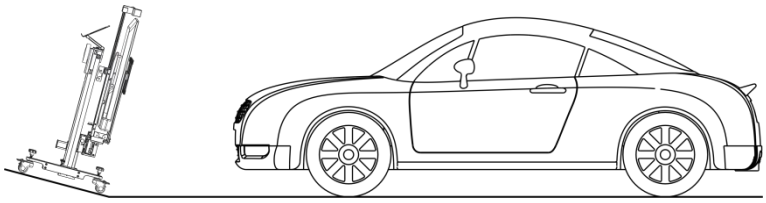
✗	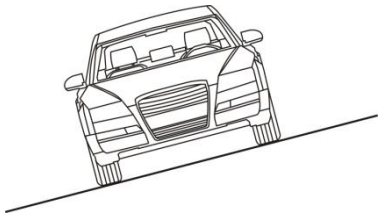

4.4.1.3 Work site Lighting Requirements

- ✓ The lighting system around the calibration work site shall be a non-frequency flashing source including, but not limited to, LED light sources, industrial lighting in accordance with international standards, and inverted dual light sources.
- ✓ There should be no direct light sources within the camera's field of view, otherwise the camera will reduce the exposure and darken the captured calibration target, which will adversely affect the calibration.
- ✓ Layout the light source appropriately to ensure that there are no reflection points on the calibration target.
- ✓ Lay out the light sources properly to ensure an even distribution of light in the calibration work site
- ✓ Do not change the brightness of the lighting and make sure that there are no other changing light sources around the work site.

4.4.1.4 Connected Diagnostic Equipment and Vehicle

Before calibration, the diagnostic equipment needs to be connected to the vehicle.

There are two ways to enter the ADAS calibration function, click the “ADAS” App or click “ADAS Calibration” icon in the “Four-Wheel Alignment Report” interface.

- Click the “ADAS” App to start ADAS calibration.

  The steps are as follows:

  1. Click on the "ADAS" icon.
  2. Click on "Passenger Cars".
  3. Click "ADAS Calibration" to automatically scan for vehicle information and enter the ADAS menu. (If the vehicle is not automatically recognized, you will need to manually select the vehicle model software.)
  4. Select the system to be calibrated.

- Click “ADAS Calibration” button to start ADAS calibration in the “Four-Wheel Alignment Report” interface.

  The steps are as follows:

  1. Enter the Report interface of four-Wheel alignment, and click “ADAS Calibration” button to enter the ADAS calibration interface.

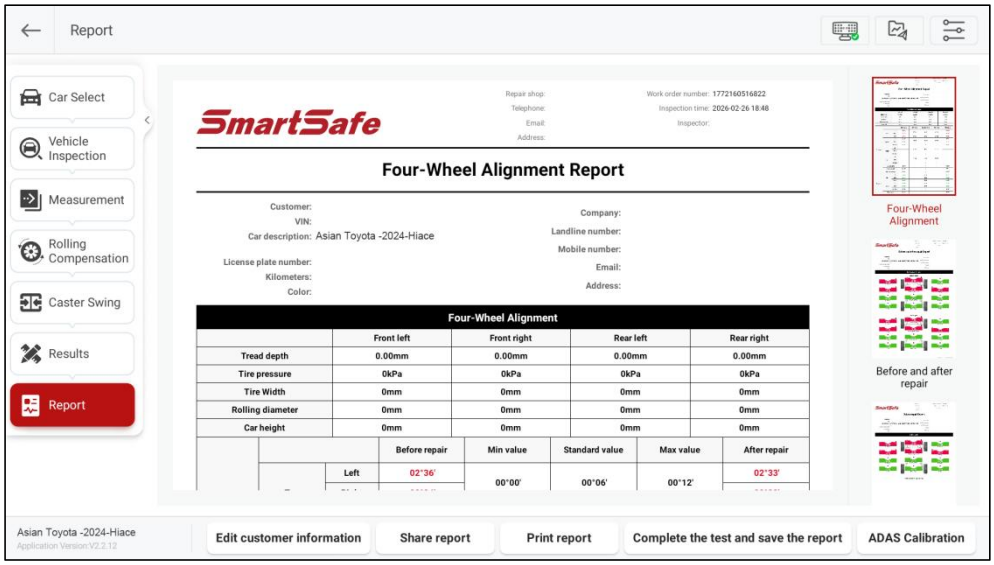

2. Remove the measurement units and the front wheel clamps. Replace the targets on the rear wheels with distance-measuring targets, lower the lift to its lowest position, and finally connect the vehicle to the VCI.

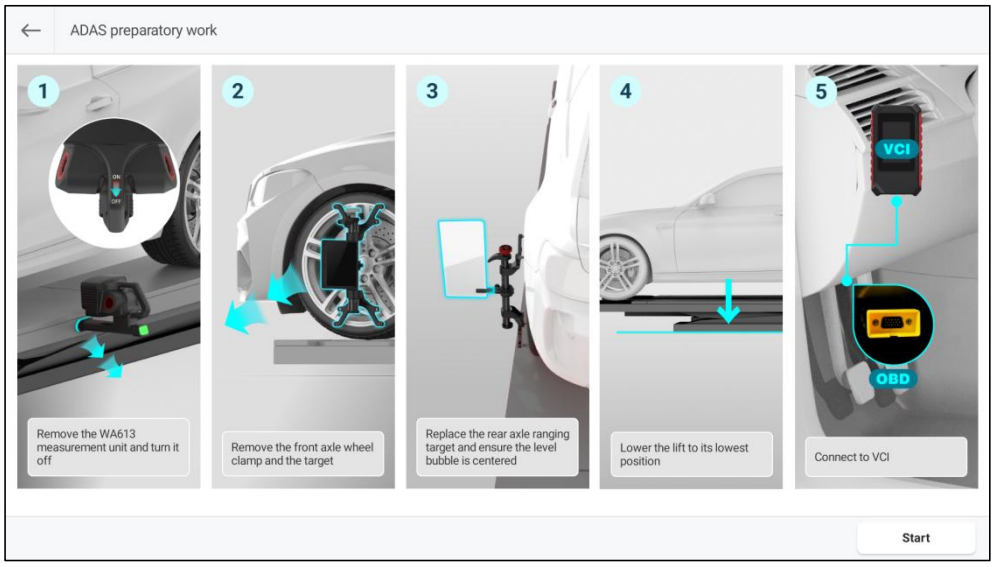

3. Select Option A or B according to the vehicle parking condition.

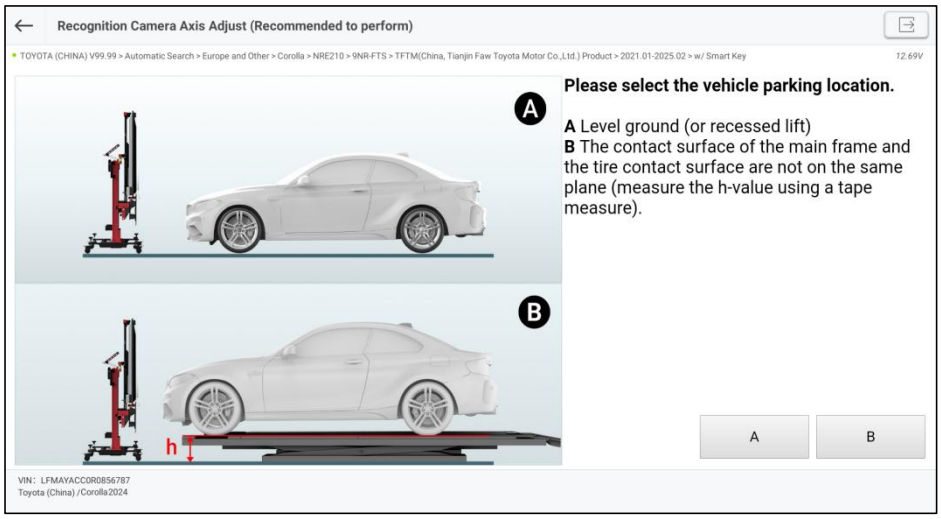

- If the vehicle is parked on a level ground, select Option A, then plan the clear area in front of the vehicle and check the ground levelness.

  a. Reserve a 3 m² clear area in front of the vehicle.

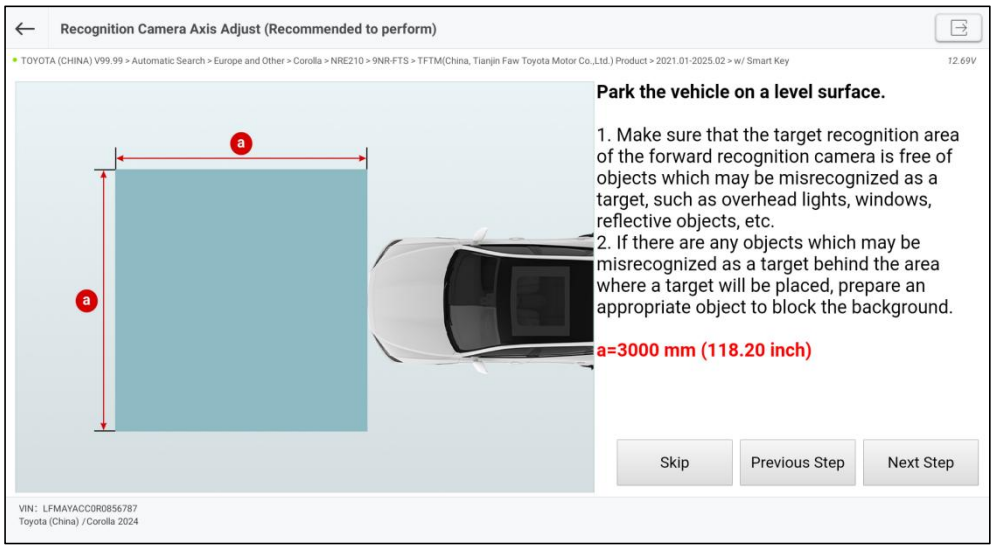

  b. Check the ground levelness using a spirit level by measuring three points, and verify that the bubble is centered. The three points are the point on the ground 2 m directly in front of the vehicle, the point on the ground directly below the center of the front bumper, and the point on the ground directly below the center of the rear bumper.

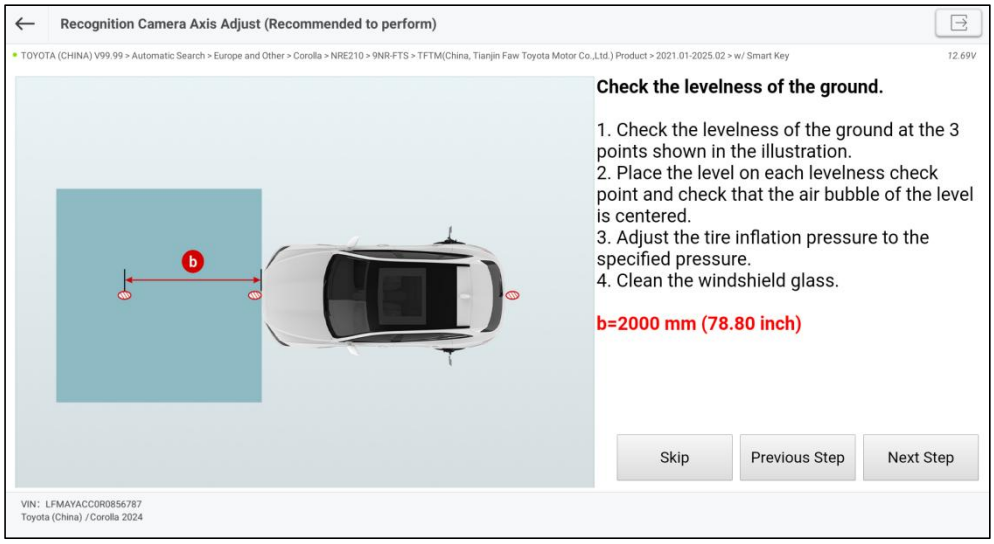

- If the diagnostic equipment and the vehicle are not on the same plane, select Option B, then measure the height h of the vehicle from the ground and enter the value h on the diagnostic tablet.

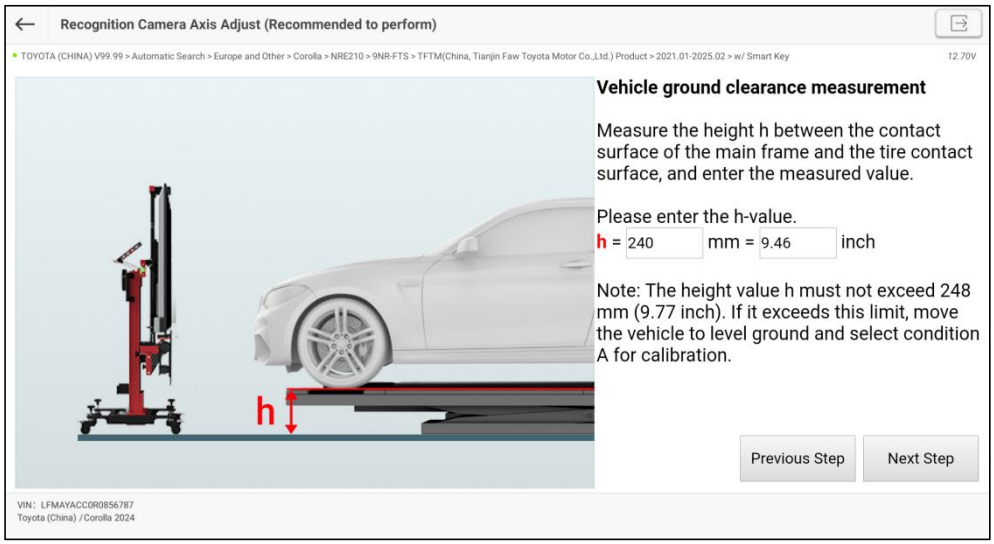

Note: If the measured vehicle height h exceeds the specified limit (the allowable height h varies by vehicle model; please refer to the prompts on the diagnostic tablet), lower the vehicle height to within the allowable range, or move the vehicle to a level ground and select Option A for calibration.

4.4.2 Calibrating the Camera

4.4.2.1 Calibrate Front Camera

When using the ADAS calibration equipment to calibrate the front camera of the vehicle, you generally need to follow the steps below:

1. Reset the equipment according to the label on the calibration equipment.
2. Install the wheel clamps and distance measuring panel.
3. Determine the distance of the calibration equipment.
4. Adjust the equipment to be centered parallel to the vehicle.

5. The large screen displays a picture of the target for the corresponding vehicle model.
6. Adjust the height of the target.
7. Execute the calibration function.

Note: The placement of the ADAS calibration equipment varies with vehicle models, please refer to the software instructions strictly.

The following is an example of measuring the wheel hub to the target position, and describes the operation steps in detail:

[Step 1] Reset the calibration equipment

Check the following positions of the calibration equipment and reset it:

①Parallel fine-tuning position

②Left-right fine-tuning position

③Front and rear fine-tuning position

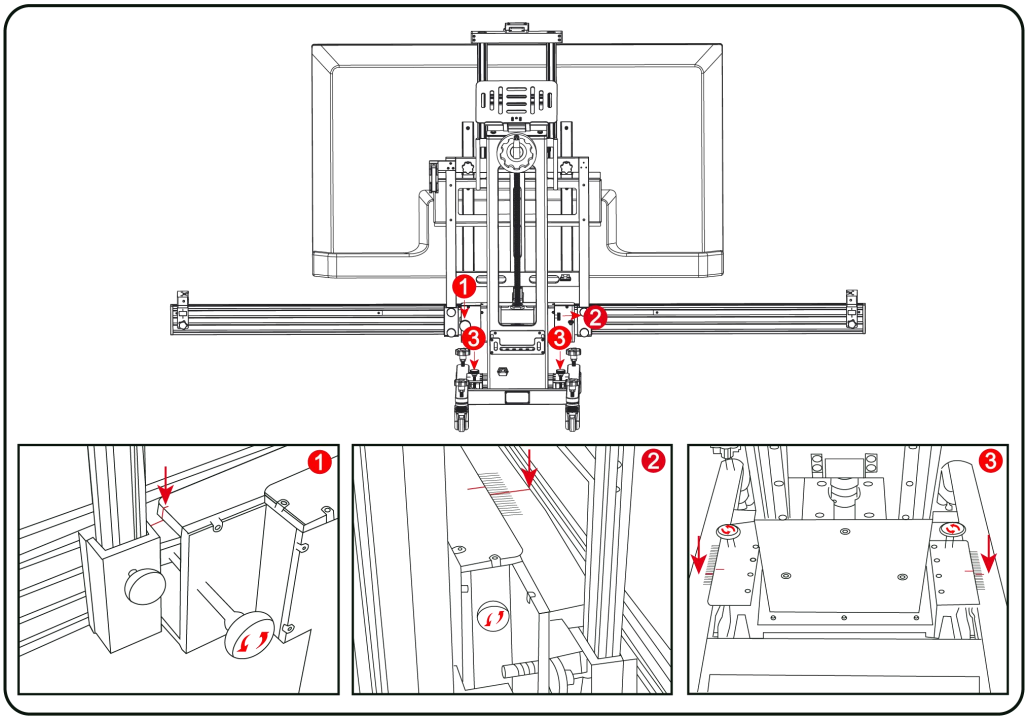

[Step 2] Install the wheel clamps and distance measuring panel.

1. Install the wheel clamps ① on the left and right rear wheels of the vehicle and make sure the level bubble ② is centered.

2. Place the distance measuring panel LAC09-01 in the center of the front wheels of the vehicle and make sure it is perpendicular to the front wheels.

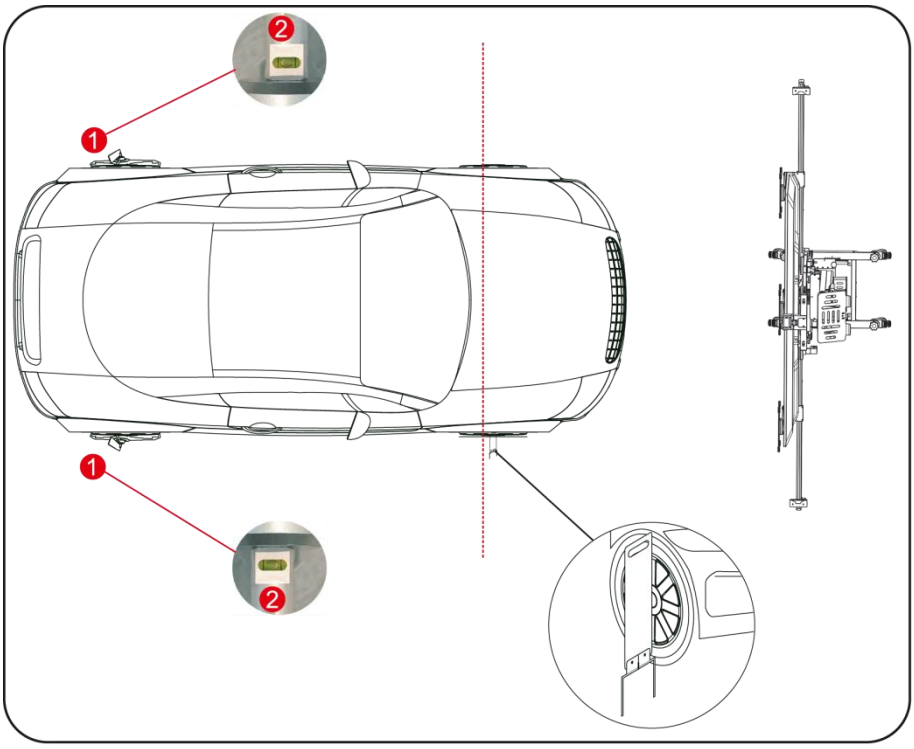

[Step 3] Determine the placement distance of the equipment

1. Turn on the mid-mounted laser LAC09-02 and position the equipment in front of the vehicle so that the laser line shines in the center of the vehicle.
2. Install the green bluetooth distance meter ① on the crossbeam, with the green bluetooth distance meter ① on the same side as the distance measuring panel LAC09-01, and turn on the green bluetooth distance meter so that the laser dot is illuminated on the distance measuring panel LAC09-01, if the laser dot does not reach the distance measuring panel, adjust the height of the equipment.
3. Move the equipment back and forth so that the value of green bluetooth distance meter ① is L (L = the distance prompted by the software).

Note: The measurement starting point is calculated from the front of the green bluetooth distance meter.

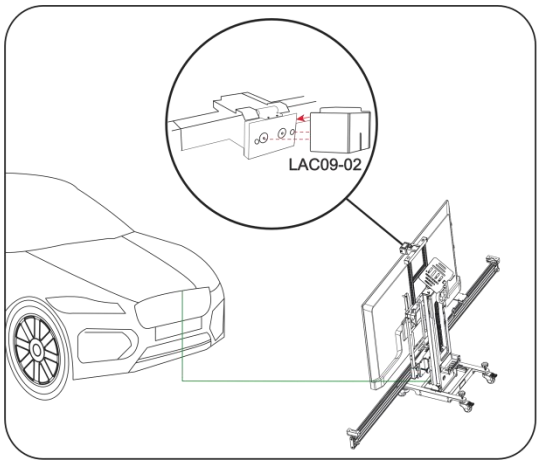

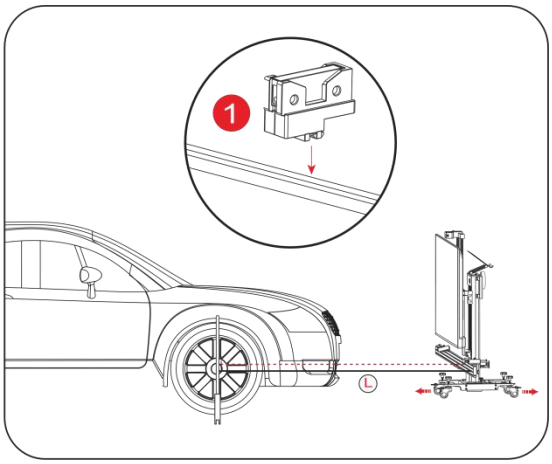

4. Observe the level bubble ②, rotate the base adjustment knob ③, adjust the equipment to level and then lock the moving wheel.

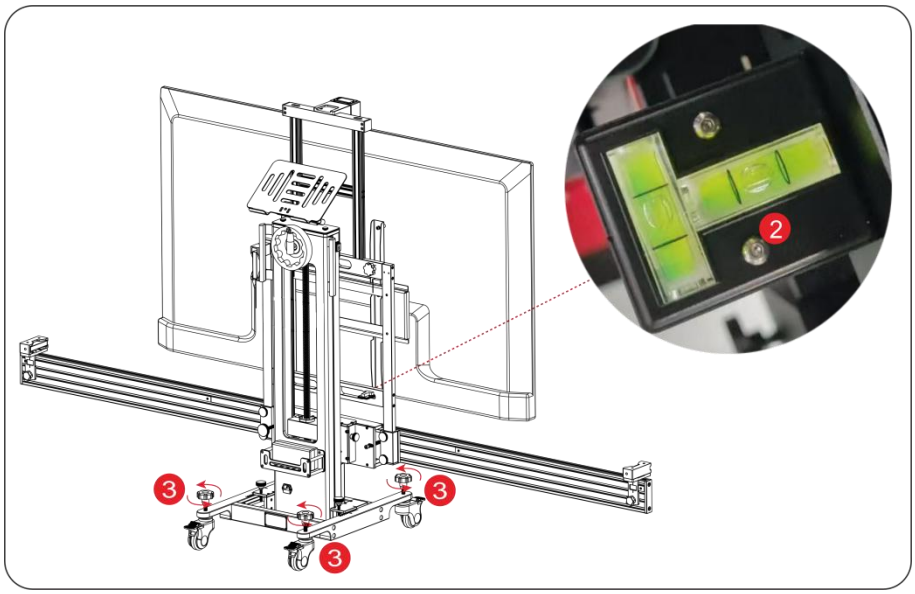

[Step 4] Adjust the equipment to be centered parallel to the vehicle.

1. Turn on and move the green bluetooth distance meter ② on both sides of the crossbeam so that the laser dot shines on the wheel clamp panel.
2. Adjust the parallel fine-tuning knob ③ so that the value of green bluetooth distance meter ② on both sides is the same (allowable error: ±1mm).
3. Check whether the value of green bluetooth distance meter ① is still L (L=distance prompted by the software), if not, you can adjust it by unlocking the front and rear fine-tuning knobs ④.

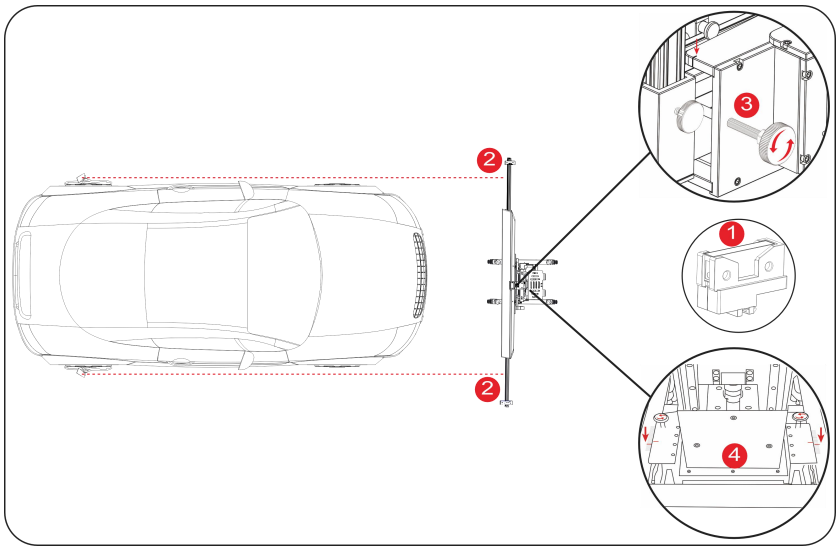

4. Adjust the left and right fine-tuning knobs ⑤ ,so that the mid-mounted laser LAC09-02 laser line shines in the center of the vehicle.

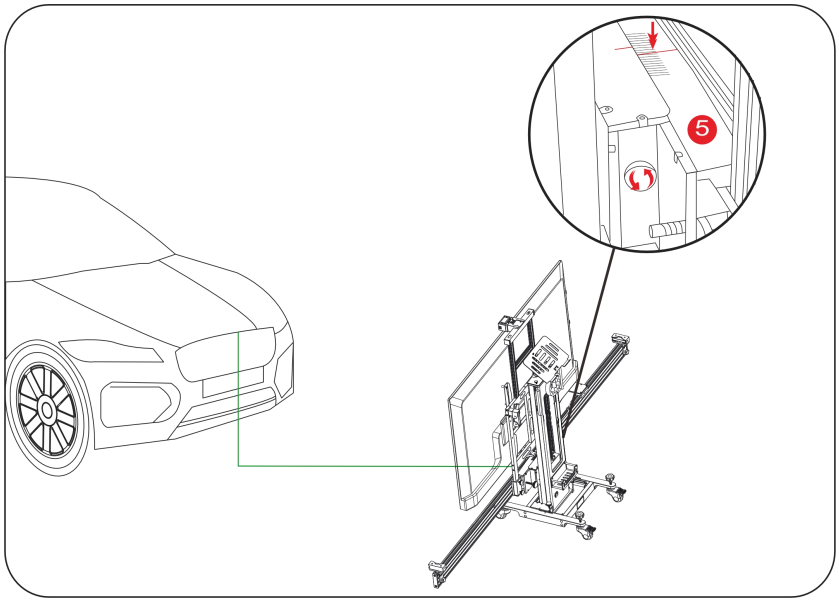

5. Turn off and remove the mid-mounted laser LAC09-02.

[Step 5] According to the vehicle model to be calibrated, the corresponding electronic target will be displayed on the large screen.

[Step 6] Follow the software prompts to adjust the height of the target.

Turn on the blue bluetooth height distance meter ① and adjust the height of the equipment so that the value of the blue bluetooth height distance meter ① is H (H=height prompted by the software).

Note:

- Please make sure that the laser irradiation area is free of water stains and other reflections that affect the measurement results.
- The measurement starting point is calculated from the top of the blue bluetooth height distance meter.

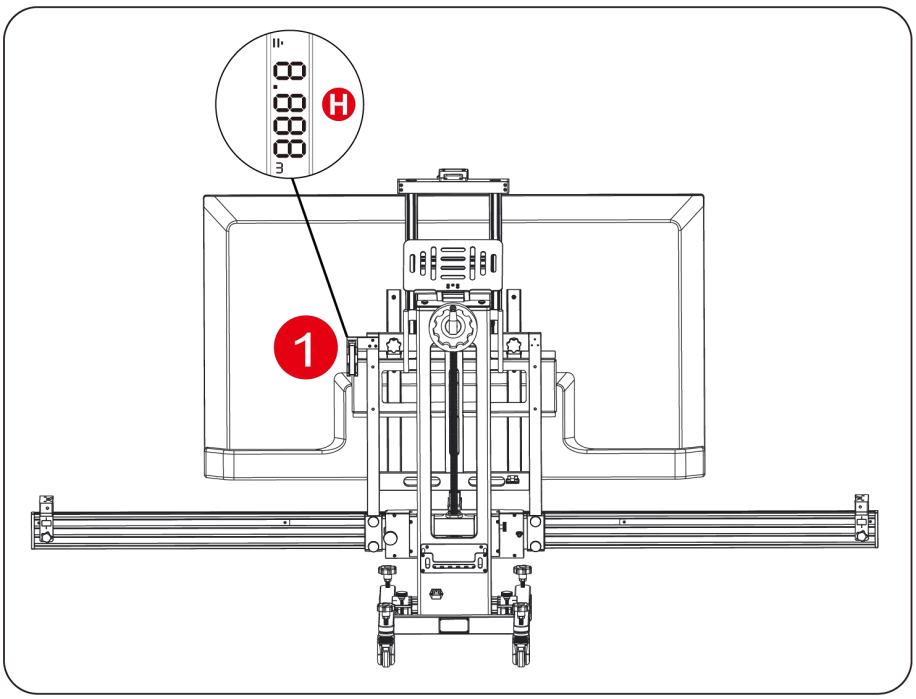

[Step 7] Perform calibration

Perform the calibration function according to the software prompts, and save the ADAS report after the calibration is completed.

[Precautions to be taken after calibration is completed]

It is recommended to re-scan the system after calibration is completed to confirm that the fault has been solved.

4.4.2.2 Calibrate Rear View Camera & Surround View Camera

When calibrating the rear view camera or surround view camera, there is no need to use ADAS calibration equipment, just select the rear view or surround view calibration target of the corresponding car model, and place the target in the corresponding position according to the software prompts.

4.4.3 Calibrate Radar Sensor

ADAS calibration equipment can be used with a variety of radar sensors calibration target (optional) to calibrate the radar sensors of ADAS. When using the ADAS calibration equipment for vehicle radar sensor calibration, you generally need to follow the steps below (take ACC radar for example):

1. Reset the calibration equipment.
2. Install the wheel clamps and distance measuring panel.
3. Determine the placement distance of the equipment.
4. Adjust the equipment to be centered parallel to the vehicle.
5. Install ACC reflector panel LAM05-02 (optional) and adjust the horizontal position.
6. Adjust the height.
7. Adjust the angle.
8. Adjust the orientation of the ACC radar sensor.
9. Complete the calibration.

The following describes the procedure in detail:

[Step 1] Reset the calibration equipment

Check the following positions of the calibration equipment and reset it:

①Parallel fine-tuning position

②Left-right fine-tuning position

③Front and rear fine-tuning position

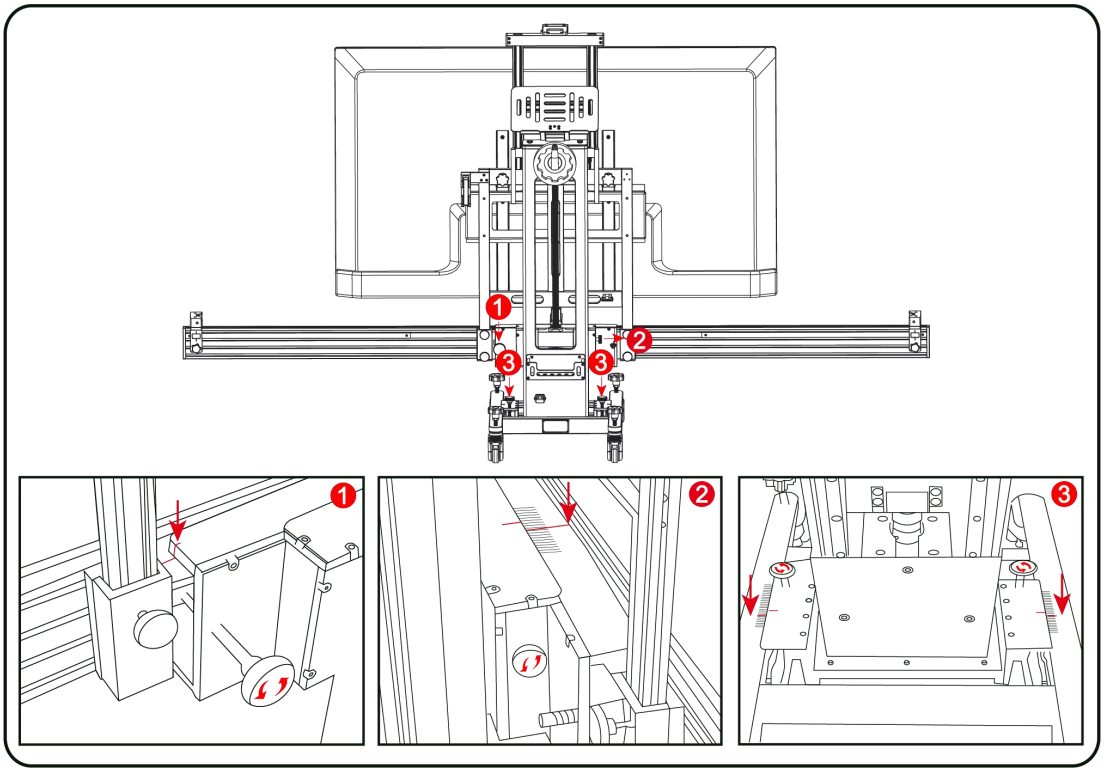

[Step 2] Install the wheel clamps and distance measuring panel.

1. Install the wheel clamps ① on the left and right rear wheels of the vehicle and make sure the level bubble ② is centered.

2. Place the distance measuring panel LAC09-01 in front of the vehicle and make sure it is close to the bumper and parallel to the vehicle.

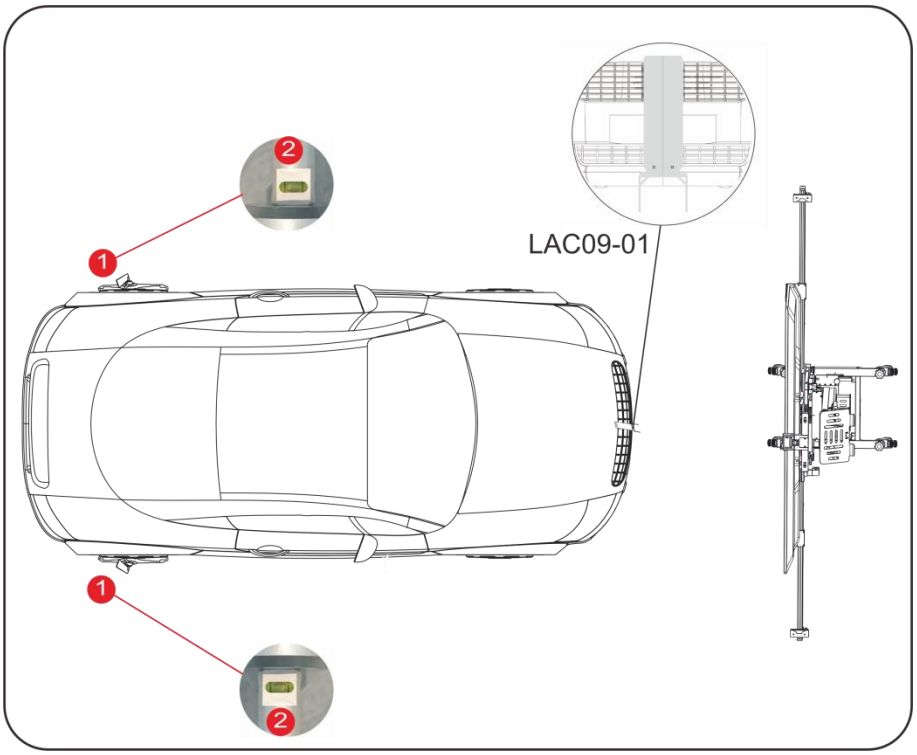

[Step 3] Determine the placement distance of the equipment

1. Place the mounting panel LAC09-03 on the crossbeam so that its centering mark is aligned with the center of the crossbeam.
2. Attach the mid-mounted laser LAC09-02 to the mounting plate LAC09-03, turn on the laser, and position the equipment in front of the vehicle so that the laser line shines in the center of the vehicle.
3. Install the green bluetooth distance meter① in the center area of the crossbeam, and turn on the distance meter so that the laser dot shines on the distance measuring panel LAC09-01.
4. Move the equipment back and forth so that the value of the green bluetooth distance meter ① is L (L = distance prompted by the software).

Note: If the laser dot does not reach the distance measuring panel, adjust the height of the equipment.

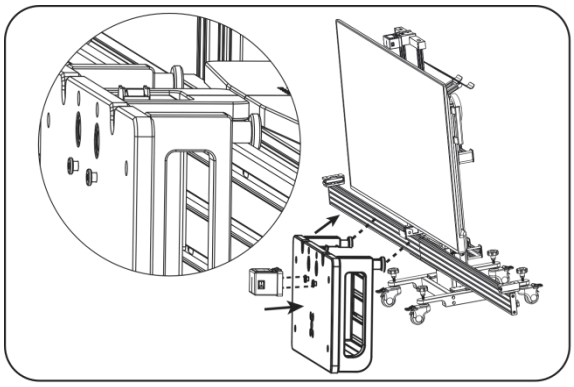

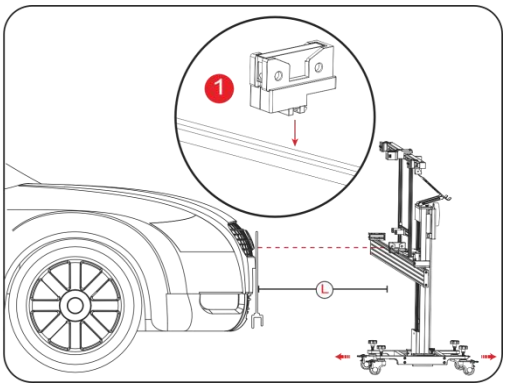

[Step 4] Adjust the equipment to be centered parallel to the vehicle.

1. Turn on and move the green bluetooth distance meter ② on both sides of the crossbeam, so that the

laser dot shines on the wheel clamp panel.

2. Adjust the parallel fine-tuning knob ③ so that the value of the green bluetooth distance meter ② on both sides is the same (allowable error: ±1mm).

3. Check whether the value of green bluetooth distance meter ① is still L (L=distance prompted by the software), if not, you can adjust it by unlocking the front and rear fine fine-tuning knobs ④.

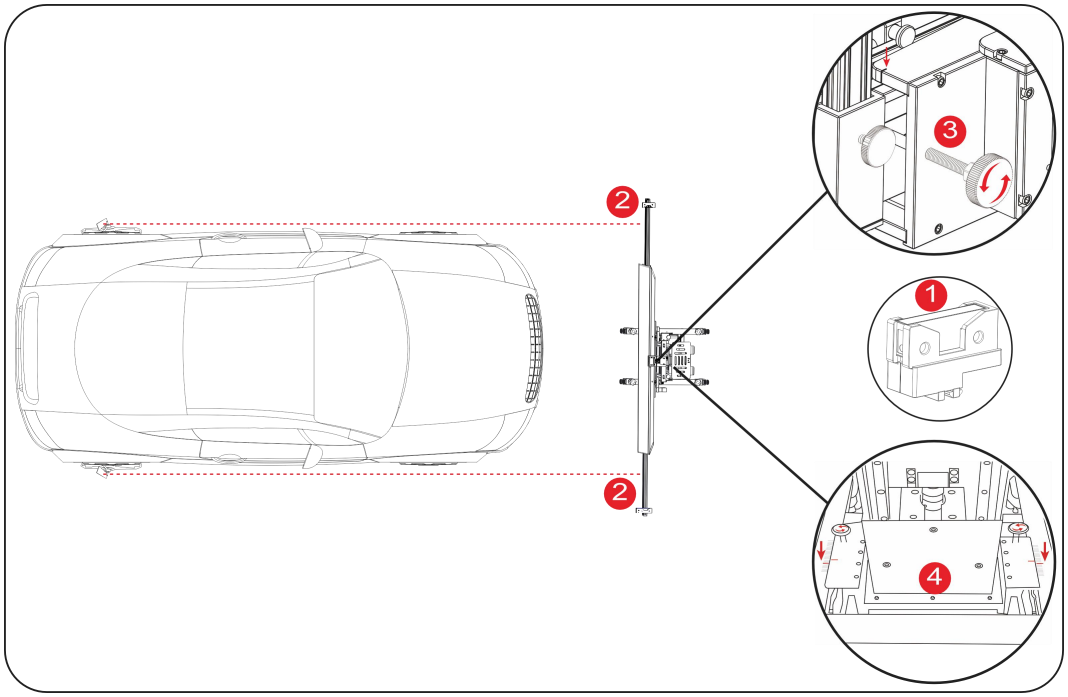

4. Adjust the left and right fine-tuning knobs ⑤ so that the laser line of the mid-mounted laser LAC09-02 shines in the center of the vehicle.

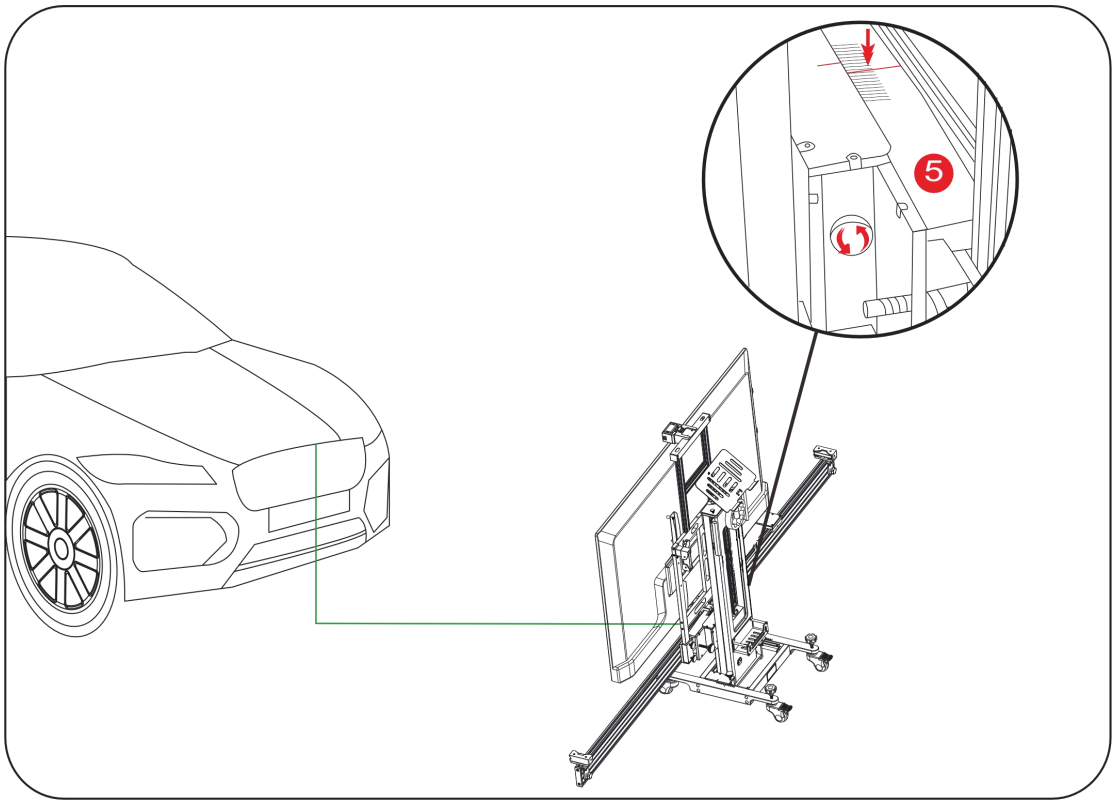

[Step 5] Install the ACC reflector panel LAM05-02 (optional) and adjust the horizontal position.

1. Remove the mid-mounted laser LAC09-02 and install the ACC reflector panel LAM05-02 (optional).
2. Adjust the position of the ACC reflector panel LAM05-02 (optional) to position 2.
3. Observe the level bubble ① on the ACC reflector panel LAM05-02 (optional), and if adjustment is necessary, unlock the individual wheels on the side to be adjusted and adjust the level position.

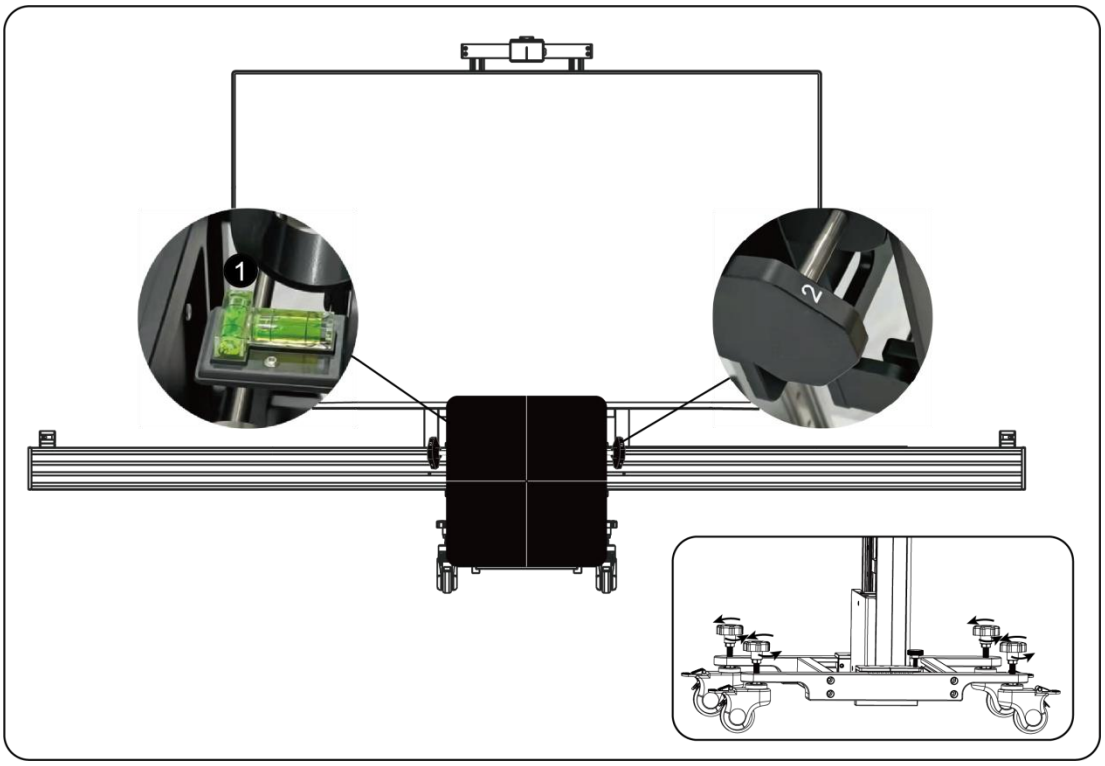

[Step 6] Adjust the height

1. Turn on the laser ray on the mounting plate LAC09-03 (optional).
2. Adjust the height of the ADAS calibration equipment so that the laser dot shines on the center of the radar sensor.

Note: In case of radar sensor with mirror, you need to shoot the laser dot at the small mirror position of the radar sensor and make sure that the laser ray can be reflected back to the center position of ACC reflector panel LAM05-02 (optional).

[Step 7] Adjust the angle

1. Adjust the ACC reflector panel LAM05-02 (optional) to position 1.

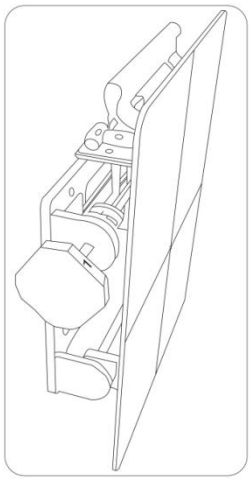

2. Adjust the ACC reflector panel LAM05-02 (optional) to position 2.

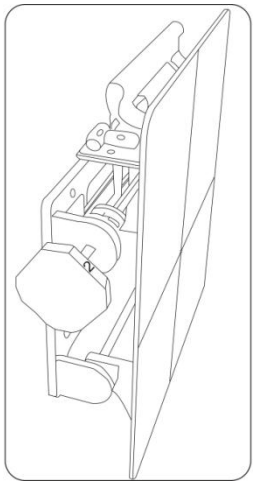

3. Adjust the ACC reflector panel LAM05-02 (optional) to position 3.

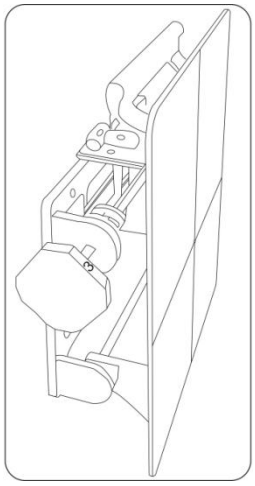

[Step 8] Adjusting the ACC Radar Sensor Orientation

If you need to adjust the sensor position, follow the software prompts to adjust the two adjusting bolts using the adjusting screw and perform the [Step 7] operation again. Skip this step if no adjustment is

required.

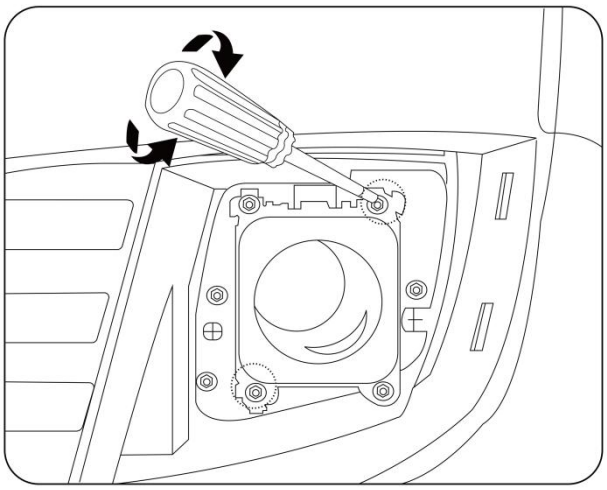

[Step 9] Calibration completed

You can save the ADAS report after the calibration is completed.

[Precautions to be taken after calibration is completed]

It is recommended to re-scan the system after calibration is completed to confirm that the fault has been solved.

4.5 Maintenance and Care

- When operating the ADAS calibration equipment, each accessory should be handled with caution.
- Use acid-free and resin-free grease or oil to periodically wipe down removable parts.
- Clean the ADAS calibration equipment regularly with a mild detergent.
- If using a standard household cleaner, spray it on a damp towel and use it.
- If there is any damage to the components, be sure to replace it immediately with an original replacement component.

4.6 Appendix: Calibration Target

4.6.1 Front Camera Calibration Target

4.6.1.1 Electronic Target (Standard)

Note: Use the large screen to display the electronic target.

No.	Target name	Target number	Reference picture
1	Benz front camera target	LAM01-01	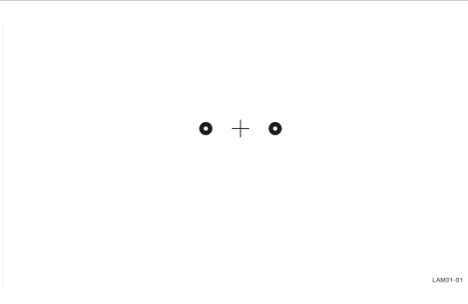
2	VOLKSWAGEN front camera target	LAM01-02	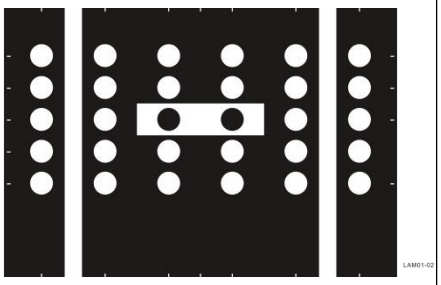
3	TOYOTA front camera target	LAM01-06-1 (for reference)	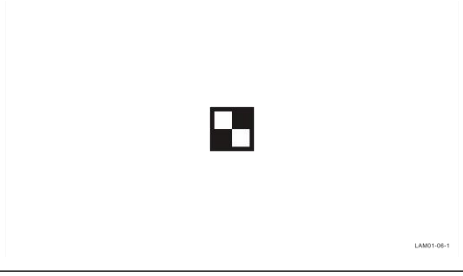
4	TOYOTA front camera target	LAM01-06-2 (for reference)	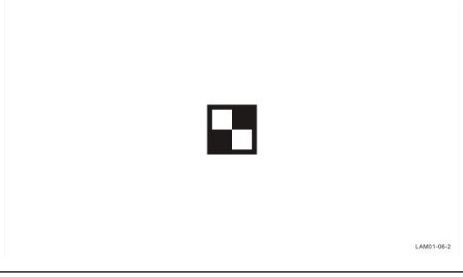

5	TOYOTA front camera target	LAM01-06-3 (for reference)	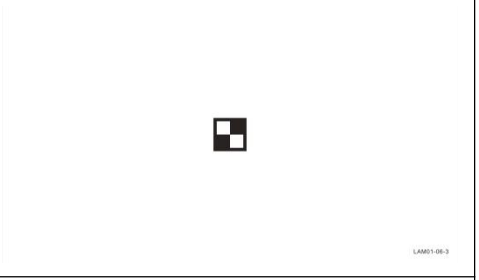
6	TOYOTA front camera target	LAM01-06-4 (for reference)	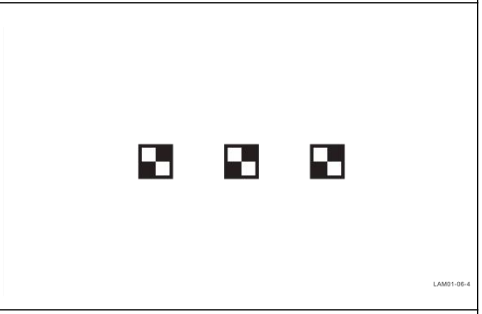
7	Nissan front camera target	LAM01-07	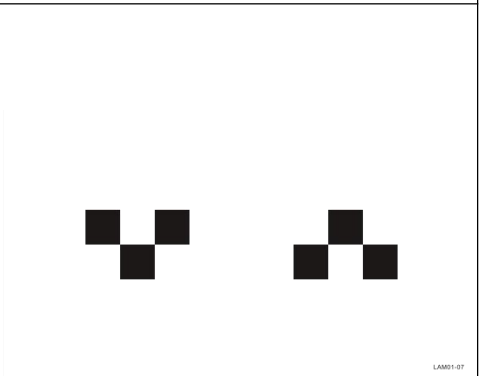
8	HYUNDAI front camera target	LAM01-09	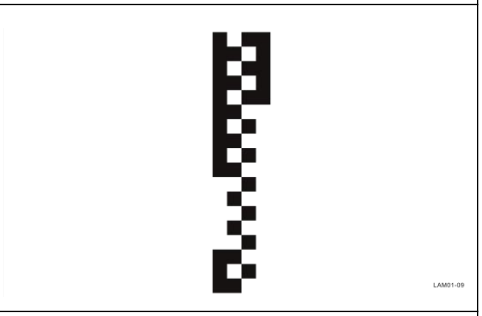
9	Mazda front camera target	LAM01-10	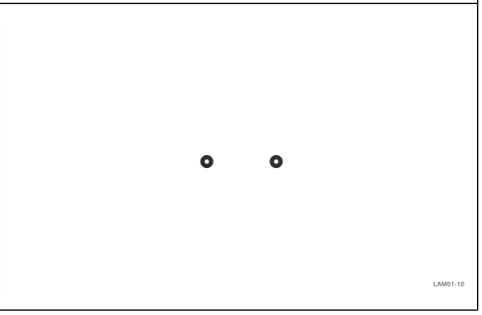

10	Romeo front camera target	LAM01-11	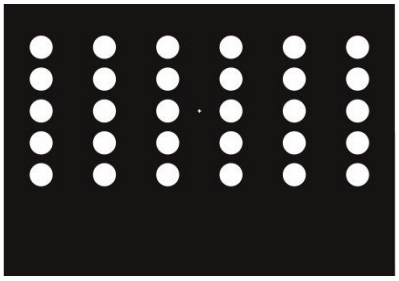
11	Nissan/Renault front camera target	LAM01-12	
12			
13	Subaru front camera target	LAM01-15	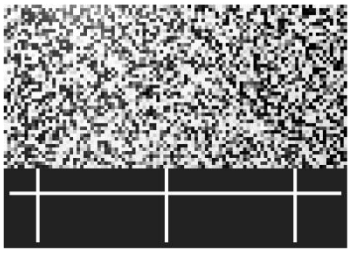
14	Mazda front camera target	LAM01-16	

15	HONDA front camera target	LAM01-17 (for reference)	
16	Suzuki front camera target	LAM01-18	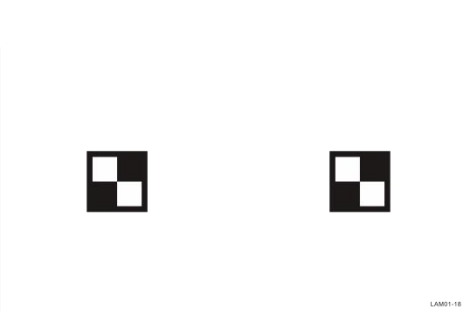
17	Mitsubishi front camera target	LAM01-19	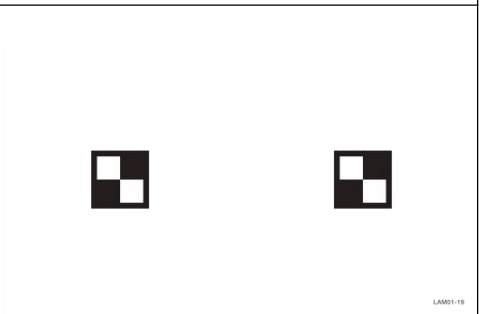
18	Subaru front camera target	LAM01-21	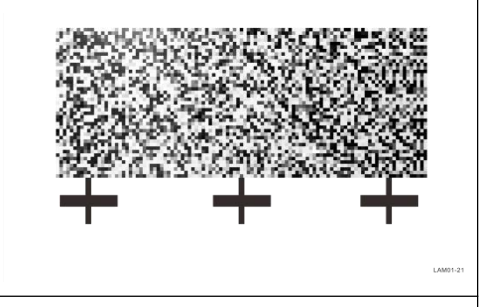
19	Sprint front camera target	LAM01-23	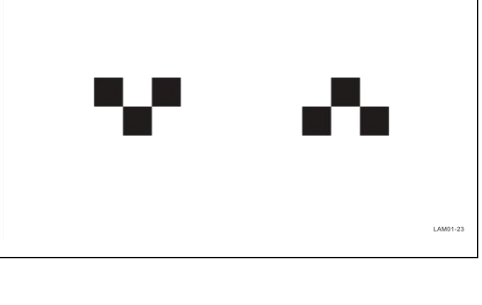

20	Suzuki front camera target	LAM01-25	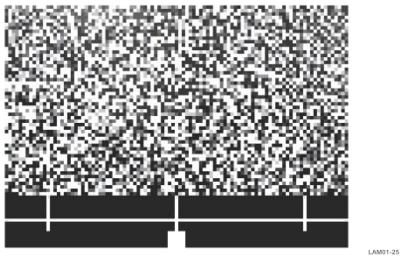
21	Daihatsu front camera target	LAM01-30	
22	Maserati front camera target	LAM01-32	
23	Leapmotor front camera target	LAM01-35	
24	Tesla front camera target	LAM01-36	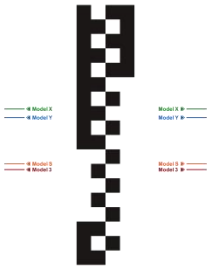

4.6.1.2 Physical Target (Optional)

Note: The physical targets in this section must be used in conjunction with the physical target stand (optional).

No.	Target name	Target number	Reference picture	Quantity
1	HONDA front camera target	LAM01-04-L	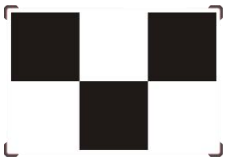	1
2	HONDA front camera target	LAM01-04-R	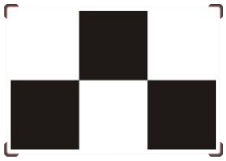	1
3	HONDA front camera target	LAM01-20		1
4	Subaru front camera target	LAM01-31	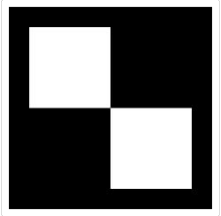	3

4.6.2 Radar Target (Optional)

No.	Target name	Target number	Reference picture	Quantity
1	ACC radar target (including mounting plate)	ACC reflector panel LAM05-02	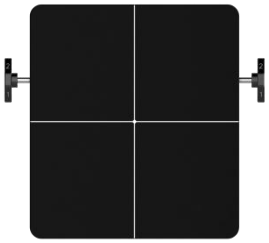	1
		Mounting plate LAC09-03		1
2	Tapered radar target	LAC05-03		1
3	Doppler Simulator	LAC05-04		1
4	Volkswagen/Audi LIDAR Target	LAC05-06		1

4.6.3 Rear View & Omnidirectional Target (Optional)

4.6.3.1 Rear View& Omnidirectional Target (Asia)

No.	Target name	Target number	Reference picture	Quantity
1	HONDA omnidirectional target	LAC04-01		4
		LAC04-02		1
2	Nissan rear view target	LAC04-11	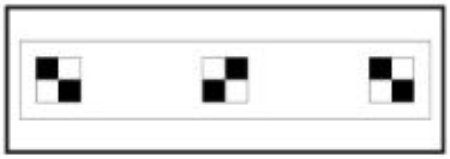	1
3	Hyundai/Kia-AVM	LAC04-31-1		2
		LAC04-31-2		2
		LAC04-31-3		4
4	Mitsubishi omnidirectional target	LAC04-13	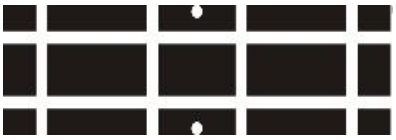	2
5	Nissan rear view target	LAC04-15	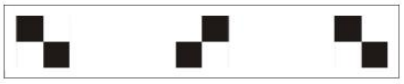	1
6	TOYOTA omnidirectional target	LAC04-16-1		4
		LAC04-16-2		6
		LAC04-16-3		2

		LAC04-16-4		2
7	HONDA Blind Spot Indicator Target	LAC04-17	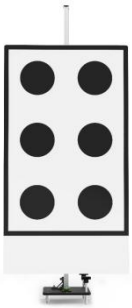	1
8	Nissan rear view target	LAC04-24	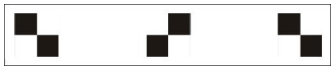	1
9	TOYOTA rear view target	LAC04-25	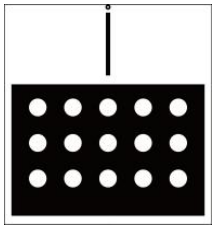	1

4.6.3.2 Rear View & Omnidirectional Target (USA)

No.	Target name	Target number	Reference picture	Quantity
1	Cadillac omnidirectional target	LAC04-06		1
2	Ford omnidirectional target	LAC04-07		2

4.6.3.3 Rear View & Omnidirectional Target (Europe)

No.	Target name	Target number	Reference picture	Quantity
1	Benz rear view target	LAC02-02		1
2	VOLKSWAGEN rear view target	LAC02-03		1
3	VOLKSWAGEN omnidirectional target	LAC04-04		2
4	Benz omnidirectional target	LAC04-08-01	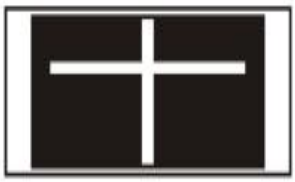	1
		LAC04-08-02		1
5	Reynolds omnidirectional target	LAC04-10-01		1
		LAC04-10-02	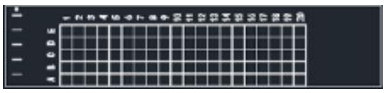	1

6	VOLKSWAGEN omnidirectional target	LAC04-14		2
7	Porsche omnidirectional target	LAC04-05-1		2
		LAC04-05-2		2

1. Rear View & Omnidirectional Target (China)

No.	Target name	Target number	Reference picture	Quantity
1	Rongwei omnidirectional target	LAC04-18		4
2	BYD omnidirectional target	LAC04-19-1		2
		LAC04-19-2	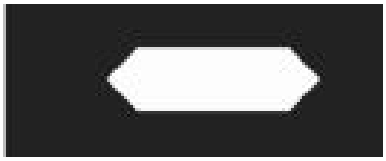	2
3	Wuling/Baojun omnidirectional target	LAC04-20-1		1
		LAC04-20-2		1
		LAC04-20-3	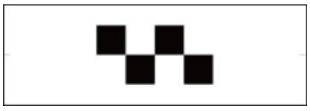	2
4	LYNK＆CO omnidirectional target	LAC04-23	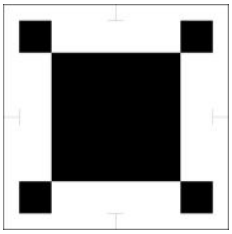	1
5	Haval omnidirectional target	LAC04-27	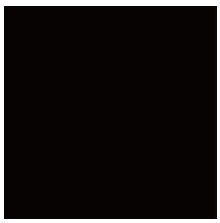	4

4.6.3.4 Night Vision target

No.	Target name	Target number	Reference picture	Quantity
1	VOLKSWAGEN night vision target	LAC06-01		1
2	Benz night vision target	LAC06-02		1

Warranty

THIS WARRANTY IS EXPRESSLY LIMITED TO PERSONS WHO PURCHASE SMARTSAFE PRODUCTS FOR PURPOSES OF RESALE OR USE IN THE ORDINARY COURSE OF THE BUYER'S BUSINESS.

SMARTSAFE electronic product is warranted against defects in materials and workmanship for one year from date of delivery to the user.

This warranty does not cover any part that has been abused, altered, used for a purpose other than for which it was intended, or used in a manner inconsistent with instructions regarding use. The exclusive remedy for any automotive meter found to be defective is repair or replacement, and SMARTSAFE shall not be liable for any consequential or incidental damages.

Final determination of defects shall be made by SMARTSAFE in accordance with procedures established by SMARTSAFE. No agent, employee, or representative of SMARTSAFE has any authority to bind SMARTSAFE to any affirmation, representation, or warranty concerning SMARTSAFE automotive meters, except as stated herein.

Disclaimer

The above warranty is in lieu of any other warranty, expressed or implied, including any warranty of merchantability or fitness for a particular purpose.

Purchase Order

Replaceable and optional parts can be ordered directly from your SMARTSAFE authorized tool supplier. Your order should include the following information:

Order quantity

Part number

Part name

Customer Service Center

For any problem met during the operation, please call +86-0755-89589810.

If the device needs to be repaired, please send it back to SmartSafe, and attach the Warranty Card, Product Qualification Certificate, Purchase Invoice and problem description. SmartSafe will maintain and repair the device for free when it is within warranty period. If it is out of warranty, SmartSafe will charge the repair cost and return freight.

SmartSafe address:

Building 1, Shanglilang Zhichuangyuan, Nanwan Street, Longgang District, Shenzhen, Guangdong, China

SmartSafe Website: http: //www.newsmartsafe.com

Statement:

SMARTSAFE reserves the rights to make any change to product designs and specifications without notice. The actual object may differ a little from the descriptions in the manual in physical appearance, color and configuration. We have tried our best to make the descriptions and illustrations in the manual as accurate as possible, and defects are inevitable, if you have any question, please contact local dealer or after-sale service center of SMARTSAFE, SMARTSAFE does not bear any responsibility arising from misunderstandings.